CROA Board Workshop

Residents may attend in person or virtually.

To join online:	To join by phone:
Click here to join the meeting Meeting ID: 273 030 124 354 Passcode: JYYhpf	Phone: 1-689-206-0281 Phone Conference ID: 596 854 441#

Wednesday, April 10, 2024 6:00 PM

AGENDA

I. Call to Order

II. Adopt Agenda

III. Action Items

A. Motion Approve Service Area Spring Pressure Washing

1. Blue Sage
2. East Village Duplexes
3. Golden Aster
4. Island Village
5. North Village- Charleston Place
6. Oak Pond
7. Parkview
8. Savannah Square
9. South Village
10. Spring Lake Townhomes

❖ Garden Homes are not pressure washed by CROA. Academy Row, Roseville, and Greenlawn are excluded because pressure washing is included as a part of their repainting cycle scheduled for Spring of 2024.

IV. Discussion Items

a. Spring Park Playground CROA Charter 3.17(u) presentation.

b. ARC Processes and Procedures

c. Committee Charters and Master Resolutions

i. Master Resolution

ii. ARC

iii. Communications
iv. Covenants
v. Dog Park
vi. Finance
vii. Lifestyles/Special Events
viii. Parks and Recreation
ix. Technology

d. Contract Negotiations
e. Future Development of the Civic Corridor
f. Review of Existing Amenities
g. Access to Association Records
h. Tennis
i. Service Area Painting Projects
    i. Roseville Corner
    ii. Greenlawn
j. Holiday Fest inflatables
k. Christmas with Celts Contract
l. CROA Owned Easements near Academy Row Landscaping Improvements
m. Reserve Park Landscaping Improvements
n. Roseling Park Landscape Improvements
o. Hippodrome Park Landscape Improvements
p. Lakeside Grill Project
q. Sunshade Structures for East Village, Island Village, and Pool Equipment
r. Landscaping RFP for Large Parks and Island Village
s. Island Village Grills
t. Longmeadow Playground
u. Security Company Contract

851 Celebration Avenue ● Celebration, Florida 34747 www.celebration.fl.us
Phone: 407-566-1200 ● Fax: 407-566-1210 townhall@ciramail.com

v. CCFC Drainage RFP Responses
w. Dog Park Electrical
x. CROA and CCDD Parcel Swap
y. Recreation Program Definitions

V. Adjournment

851 Celebration Avenue ● Celebration, Florida 34747 www.celebration.fl.us
Phone: 407-566-1200 ● Fax: 407-566-1210 townhall@ciramail.com

Action Item A

Service Area Pressure Washing

Approve Service Area Spring Pressure Washing by Portugal Partners in the amount of $16,190.00-Service Area Reserve Funds

1. Blue Sage
2. East Village Duplexes
3. Golden Aster
4. Island Village
5. North Village-Charleston Place
6. Oak Pond
7. Parkview
8. Savannah Square
9. South Village
10. Spring Lake Townhomes

Garden Homes are not pressure washed by CROA. Academy Row, Roseville, and Greenlawn are excluded because pressure washing is included as a part of their repainting cycle scheduled for Spring of 2024.

Consent A

The participation of the **2024 Spring Pressure Washing project** for the Service Areas in Celebration, FL. was offered to five (5) vendors which are Cardinal Painting, AV Pro solutions, Central painting, PGS, and Portugal Partners. Below is a chart showing three vendor proposal responses for each Service Area targeted in the project.

Managements recommendation as the preferred vendor to perform the Spring Pressure washing project is Portugal Partners. In the past year and a half, we have successfully worked with Portugal Partners whose completed all projects in a professional manor and according to Community Standards. Portugal Partners is well liked and known within the Celebration Community. The owner is a resident of Celebration.

Vendor Proposal	Blue Sage	Charleston Place	East Village	Golden Aster	Oak Pond	Parkview	Savannah Sq	SPLTH	South Village	Island Village
Cardinal Painting	$600	$1,885	$300	$150	$300	$2,585	$935	$5,450	$1,950	$3,300
AV Pro Solutions										
Central Painting	$1,562	$1,804	$524	$715	$998	$7,036	$1,592	$6,370	$4,224	$17,550
PGS										
Portugal Partners	$660	$1,595	$330	$165	$330	$2,585	$935	$3,815	$2,145	$3630

Vendor	Cleaning Price
Cardinal Painting	$17,455.00 Received 3/19/24
AV Pro Solutions	
Central Painting	$42,375.00 Received 3/25/2024
PGS	
Portugal Partners	$16,190.00 Received 3/26/2024

REQUEST FOR PROPOSAL FOR SPRING PRESSURE WASHING PROJECT FOR SERVICE AREA TOWNHOMES

RFP # 2024SPRINGPW

Celebration Residential Owners Association

Issued by:

CELEBRATION RESIDENTIAL OWNERS' ASSOCIATION, INC. (CROA) BOARD OF DIRECTORS

851 CELEBRATION AVE
CELEBRATION, FLORIDA 34747
CELEBRATION, FL

ROSE VAZQUEZ, SERVICE AREA MANAGER

407-566-1200

Date Issued: MARCH 8th, 2024.
Date/Time: APRIL 11th, 2024. 5:00 P.M.

TABLE OF CONTENTS

- GENERAL INFORMATION
  - MAP
  - PICTURES
  - PROJECT DESCRIPTION
  - GENERAL TERMS & CONDITIONS
- SCOPE OF WORK/SPECIFICATIONS
- PROPOSAL SUBMITTAL REQUIREMENTS
- PROPOSAL FORMS
  - BID RESPONSE FORM
  - DISCLOSURE OF SUBCONTRACTORS
  - EXPERIENCE
- SAMPLE SERVICES AGREEMENT

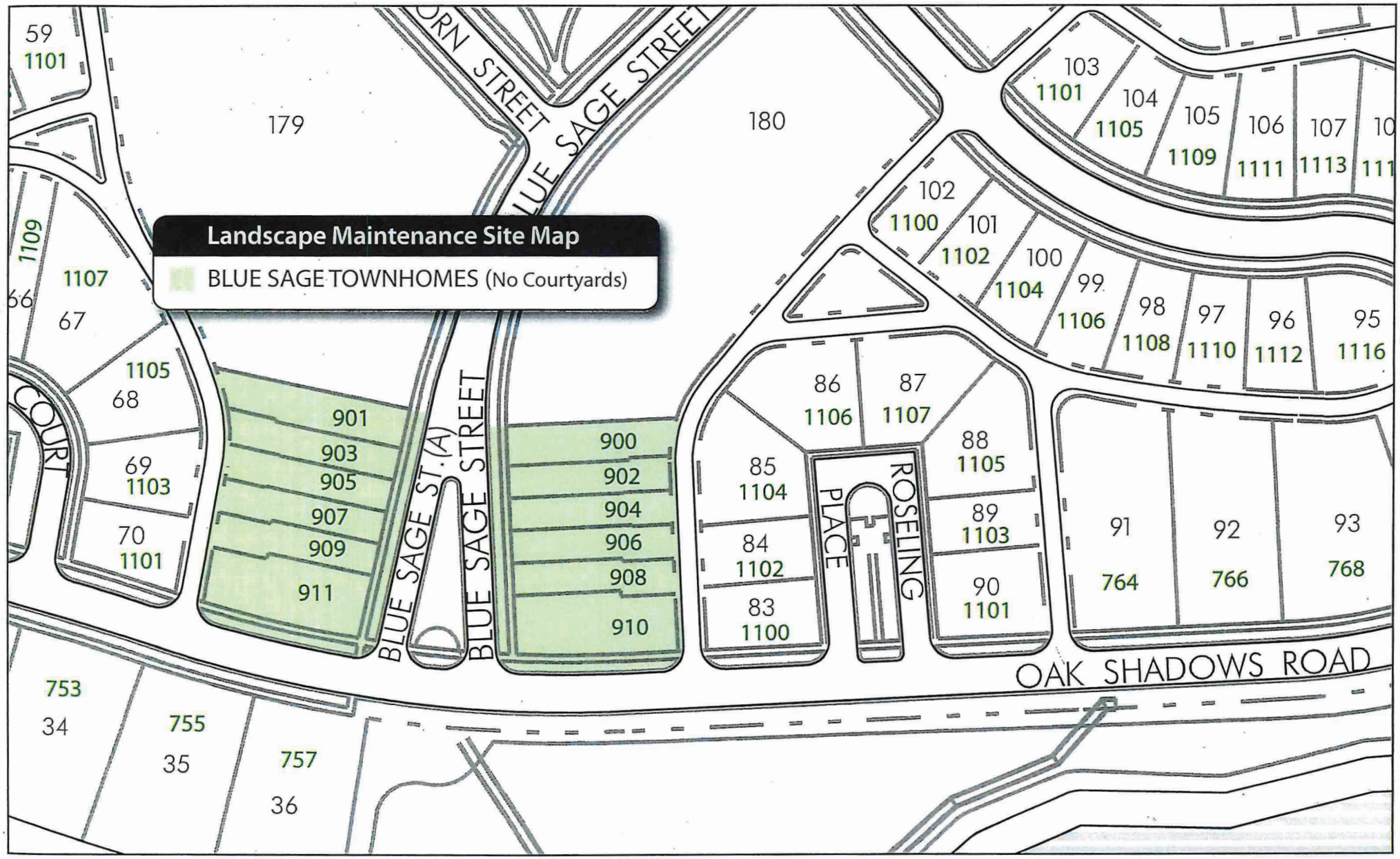

© 2017 Celebration Joint Committee, Inc.

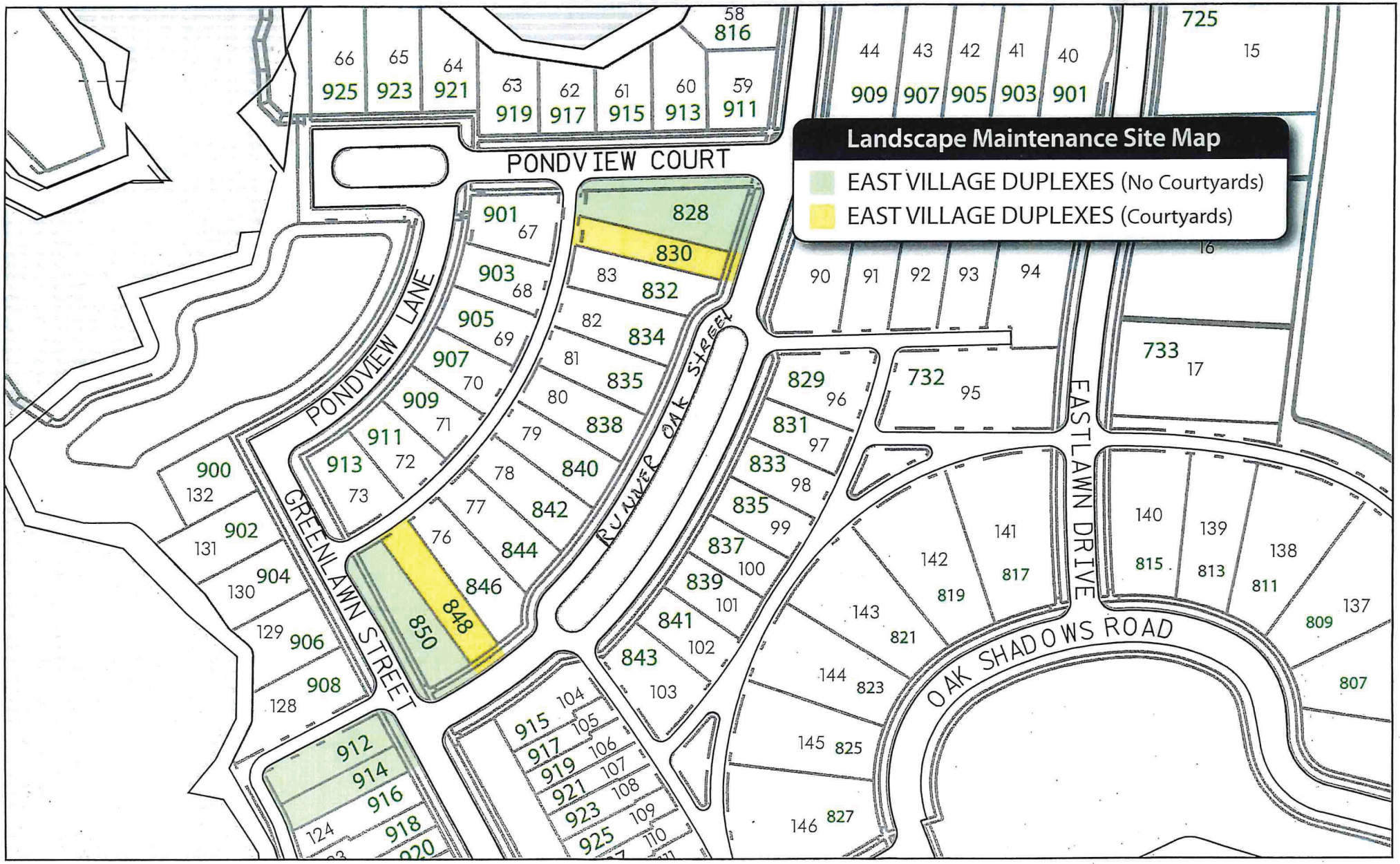

© 2017 Celebration Joint Committee, Inc.

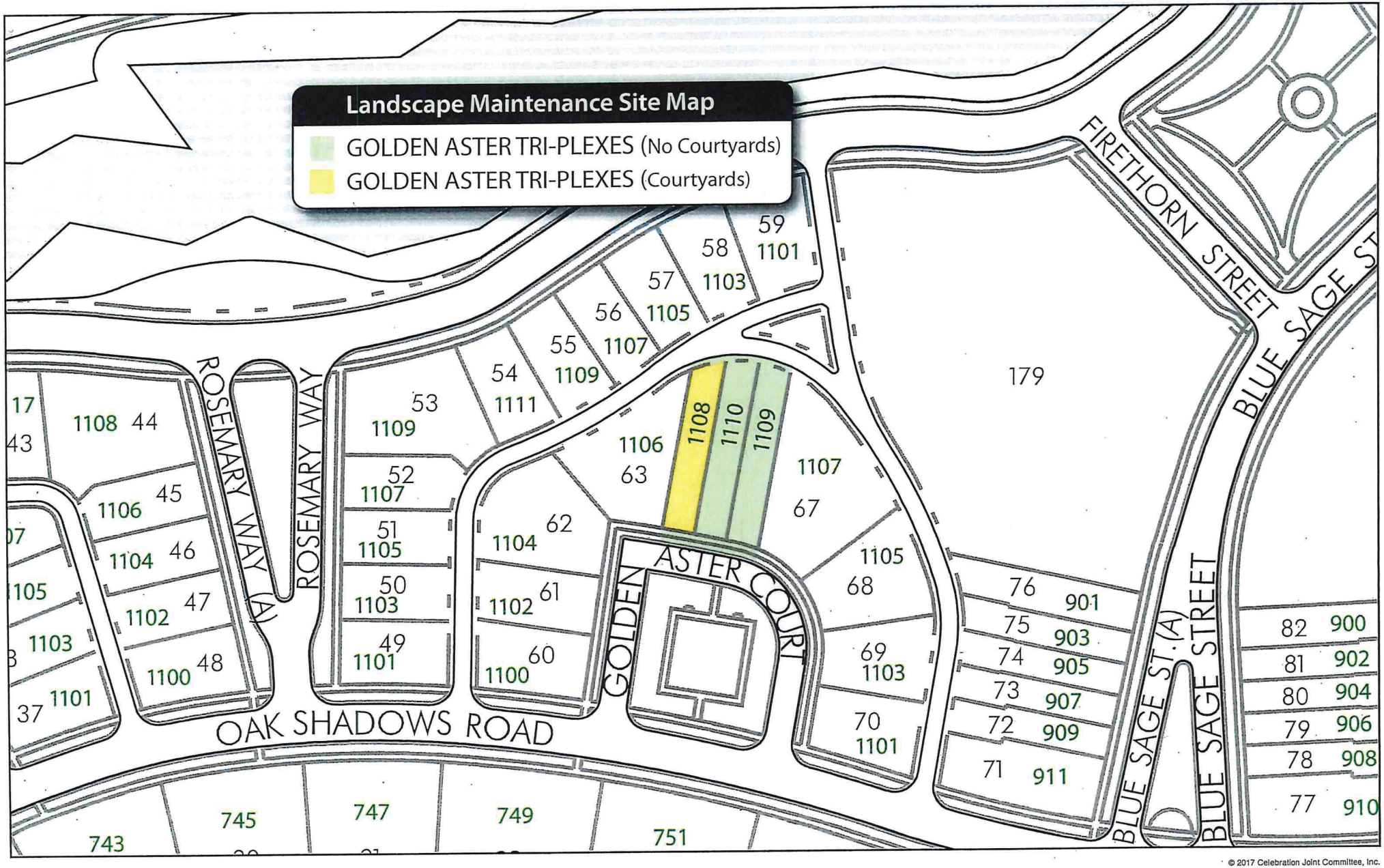

© 2017 Celebration Joint Committee, Inc.

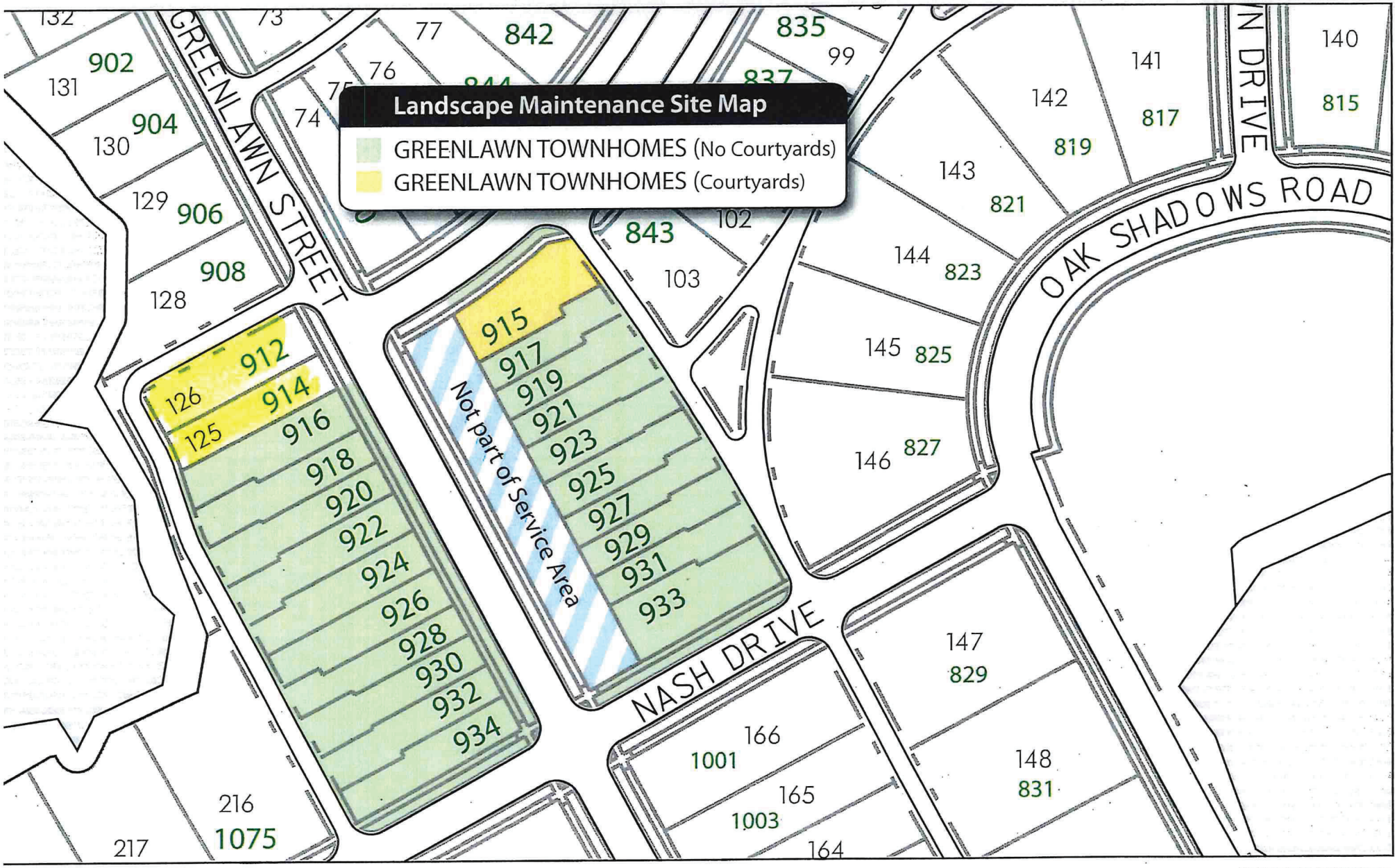

© 2017 Celebration Joint Committee, Inc.

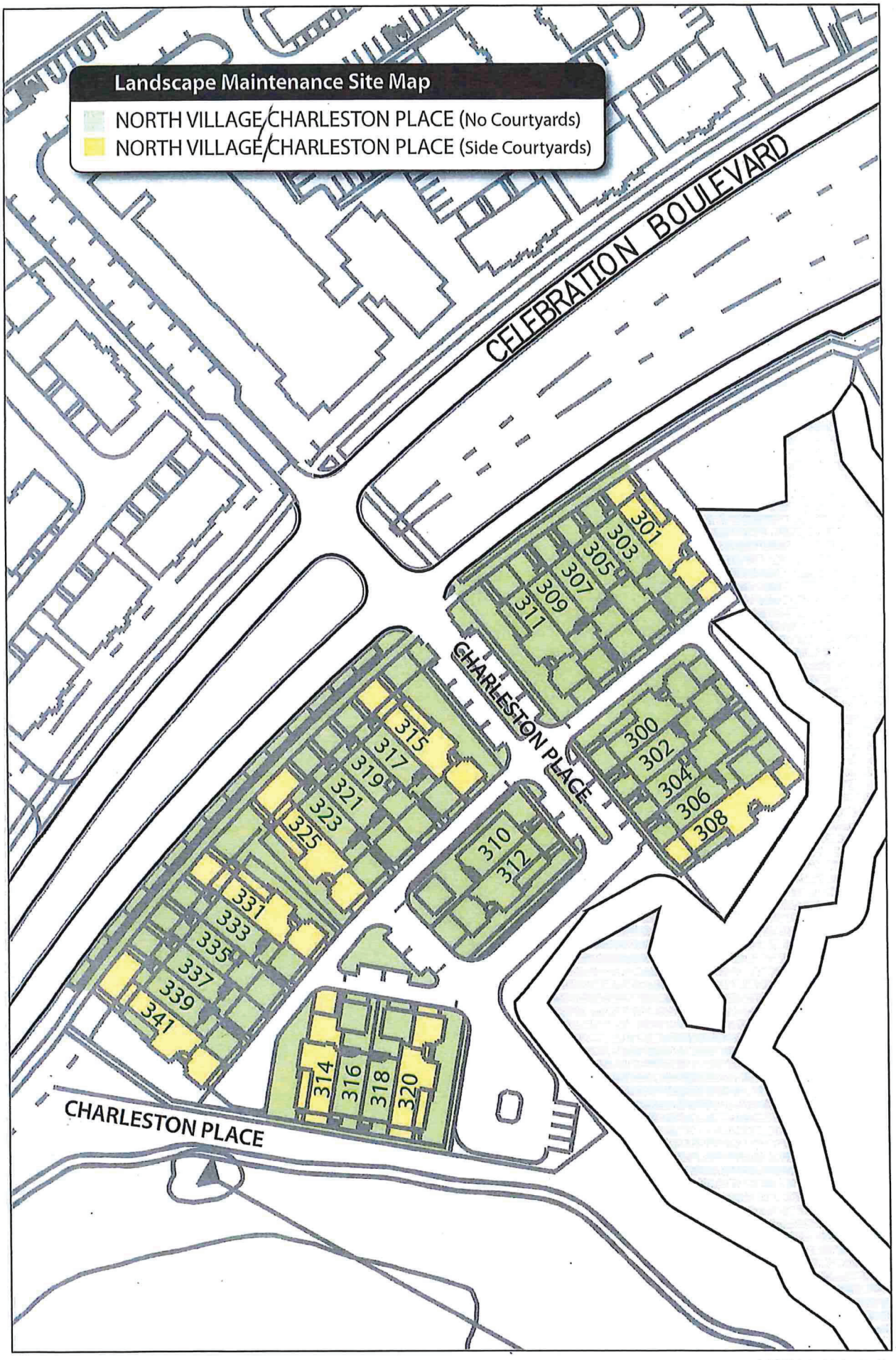

© 2017 Celebration Joint Committee, Inc.

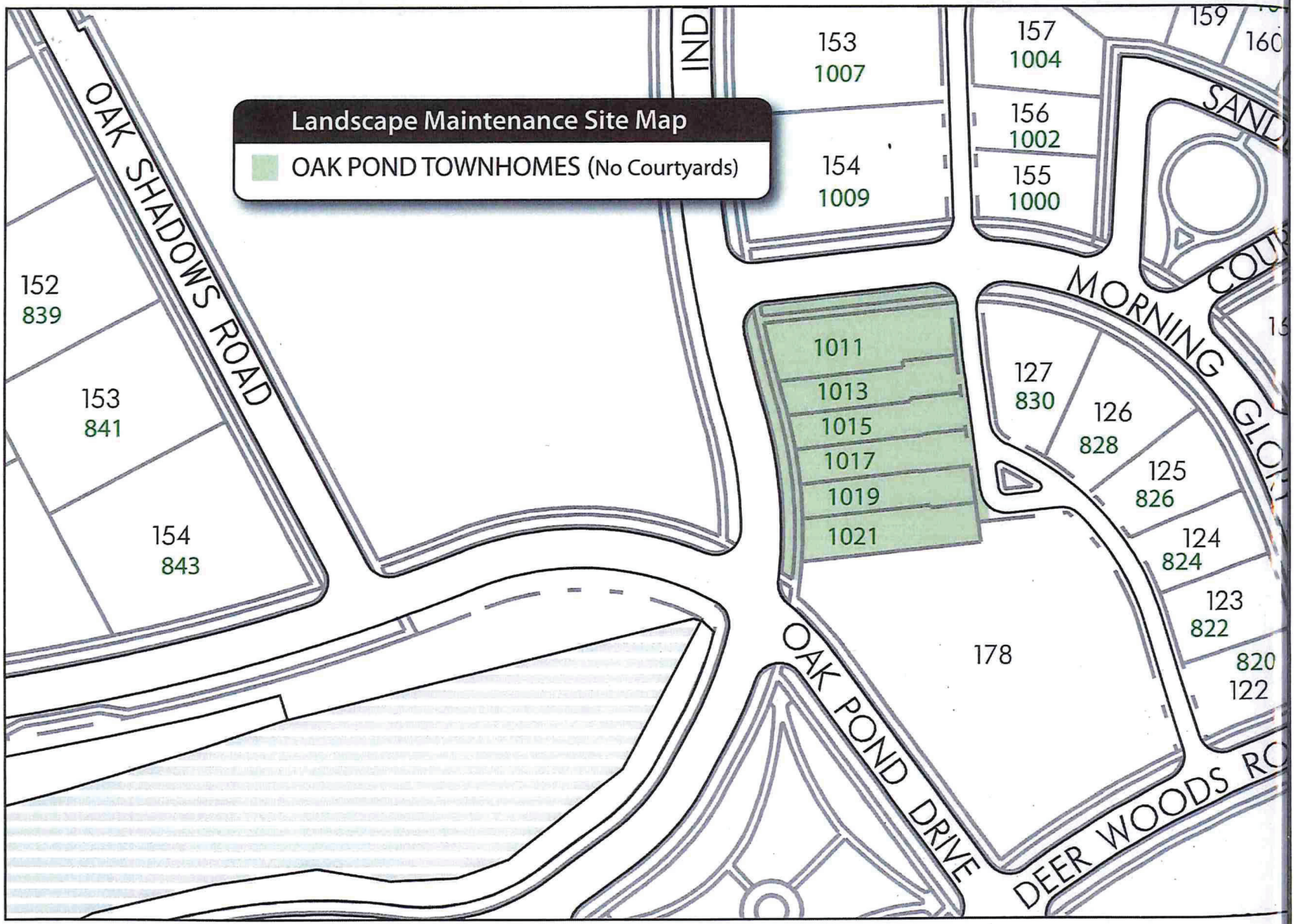
Landscape Maintenance Site Map
OAK POND TOWNHOMES (No Courtyards)
OAK SHADOWS ROAD
IND
153
1007
154
1009
157
1004
156
1002
155
1000
159
160
SAND
COU
MORNING GLO
152
839
153
841
154
843
1011
1013
1015
1017
1019
1021
127
830
126
828
125
826
124
824
123
822
820
122
178
OAK POND DRIVE
DEER WOODS RO

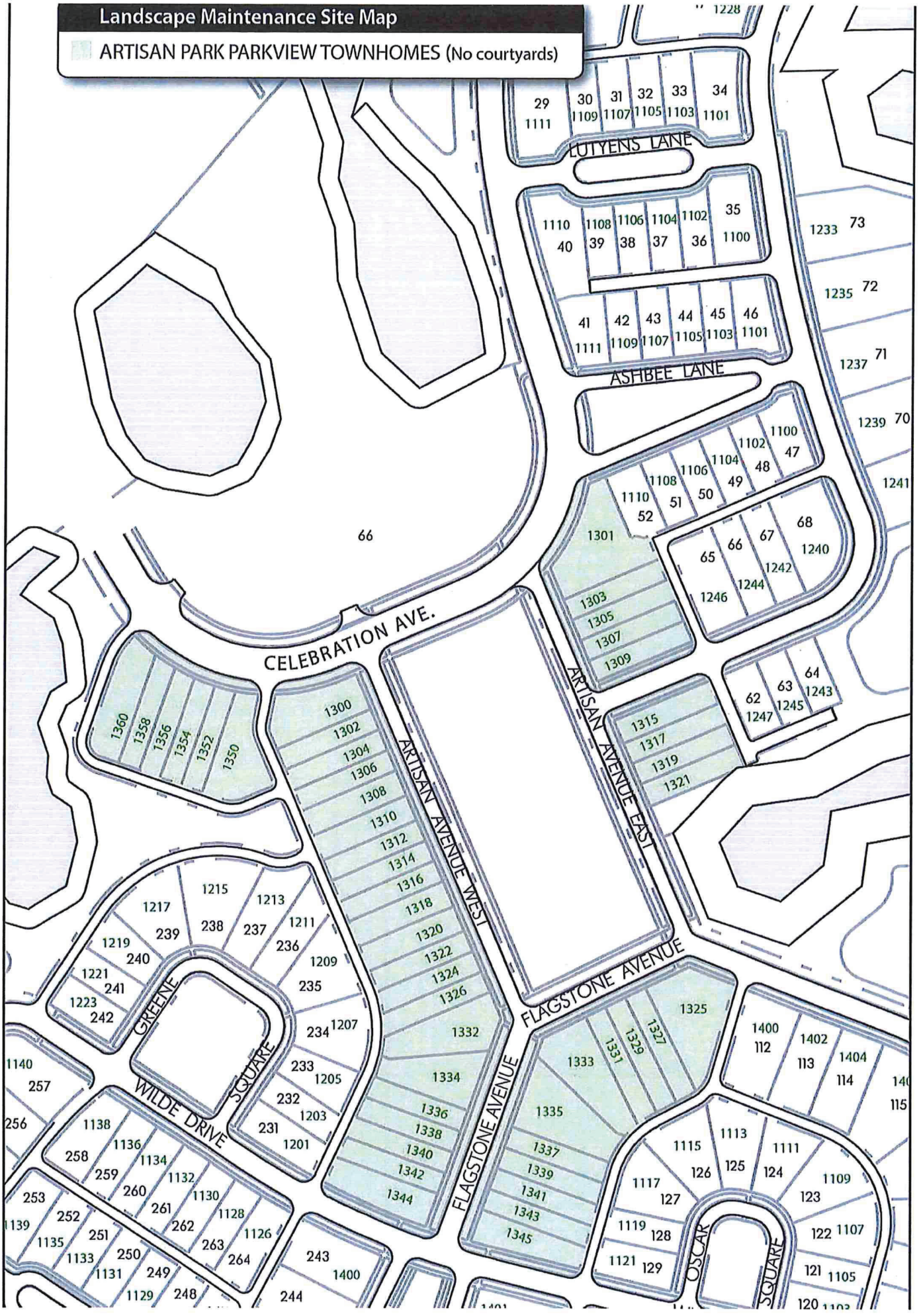
Landscape Maintenance Site Map
ARTISAN PARK PARKVIEW TOWNHOMES (No courtyards)
LUTYENS LANE
ASHBEE LANE
CELEBRATION AVE.
ARTISAN AVENUE WEST
ARTISAN AVENUE EAST
FLAGSTONE AVENUE
FLAGSTONE AVENUE
GREENE SQUARE
WILDE DRIVE
OSCAR SQUARE
66
1228
29 1111
30 1109
31 1107
32 1105
33 1103
34 1101
1110 40
1108 39
1106 38
1104 37
1102 36
35 1100
41 1111
42 1109
43 1107
44 1105
45 1103
46 1101
1233 73
1235 72
1237 71
1239 70
1241
1100 47
1102 48
1104 49
1106 50
1108 51
1110 52
1301
1303
1305
1307
1309
65
66
67
68 1240
1242
1244
1246
62 1247
63 1245
64 1243
1315
1317
1319
1321
1325
1327
1329
1331
1333
1335
1337
1339
1341
1343
1345
1400 112
1402 113
1404 114
1113
1115 126
1111 125
1117 127
124
1109 123
1119 128
122 1107
1121 129
121 1105
120
1360
1358
1356
1354
1352
1350
1300
1302
1304
1306
1308
1310
1312
1314
1316
1318
1320
1322
1324
1326
1332
1334
1336
1338
1340
1342
1344
1215
1213
1217
238
237
1211
239
236
1219
240
1209
1221
241
235
1223
242
234 1207
233 1205
232 1203
231 1201
243 1400
244
1140
257
256
1138
1136
258
1134
259
1132
260
1130
261
1128
262
1126
263
264
253
252
139
251
1135
250
1133
249
1131
248
1129

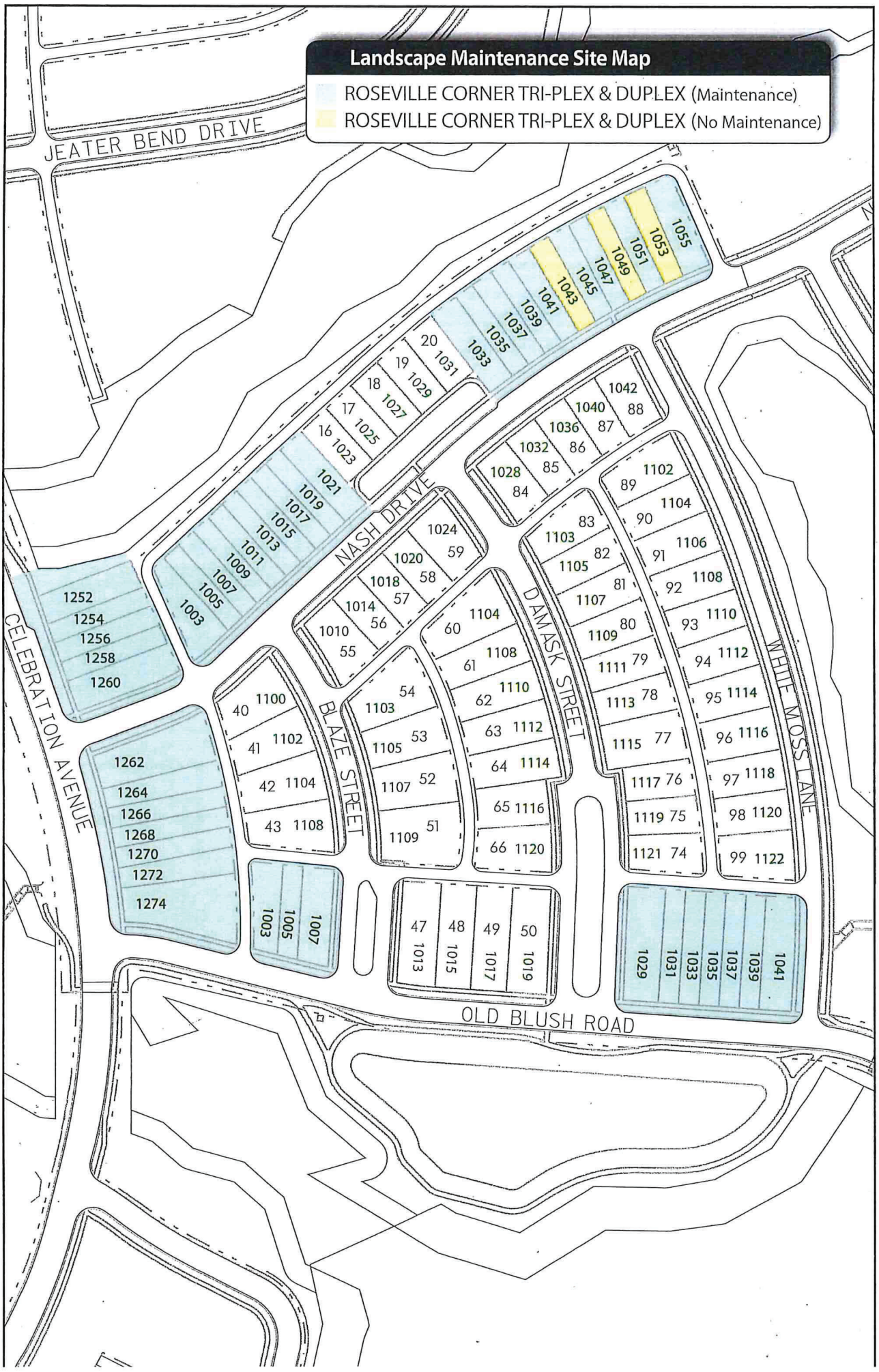
Landscape Maintenance Site Map
ROSEVILLE CORNER TRI-PLEX & DUPLEX (Maintenance)
ROSEVILLE CORNER TRI-PLEX & DUPLEX (No Maintenance)
JEATER BEND DRIVE
NASH DRIVE
CELEBRATION AVENUE
BLAZE STREET
DAMASK STREET
WHITE MOSS LANE
OLD BLUSH ROAD
1252
1254
1256
1258
1260
1262
1264
1266
1268
1270
1272
1274
1003
1005
1007
1009
1011
1013
1015
1017
1019
1021
1023
1025
1027
1029
1031
1033
1035
1037
1039
1041
1043
1045
1047
1049
1051
1053
1055
1010
1014
1018
1020
1024
1028
1032
1036
1040
1042
1100
1102
1104
1106
1108
1110
1112
1114
1116
1118
1120
1122
1103
1105
1107
1109
1111
1113
1115
1117
1119
1121
1013
1015
1017
1019
1029
1031
1033
1035
1037
1039
1041

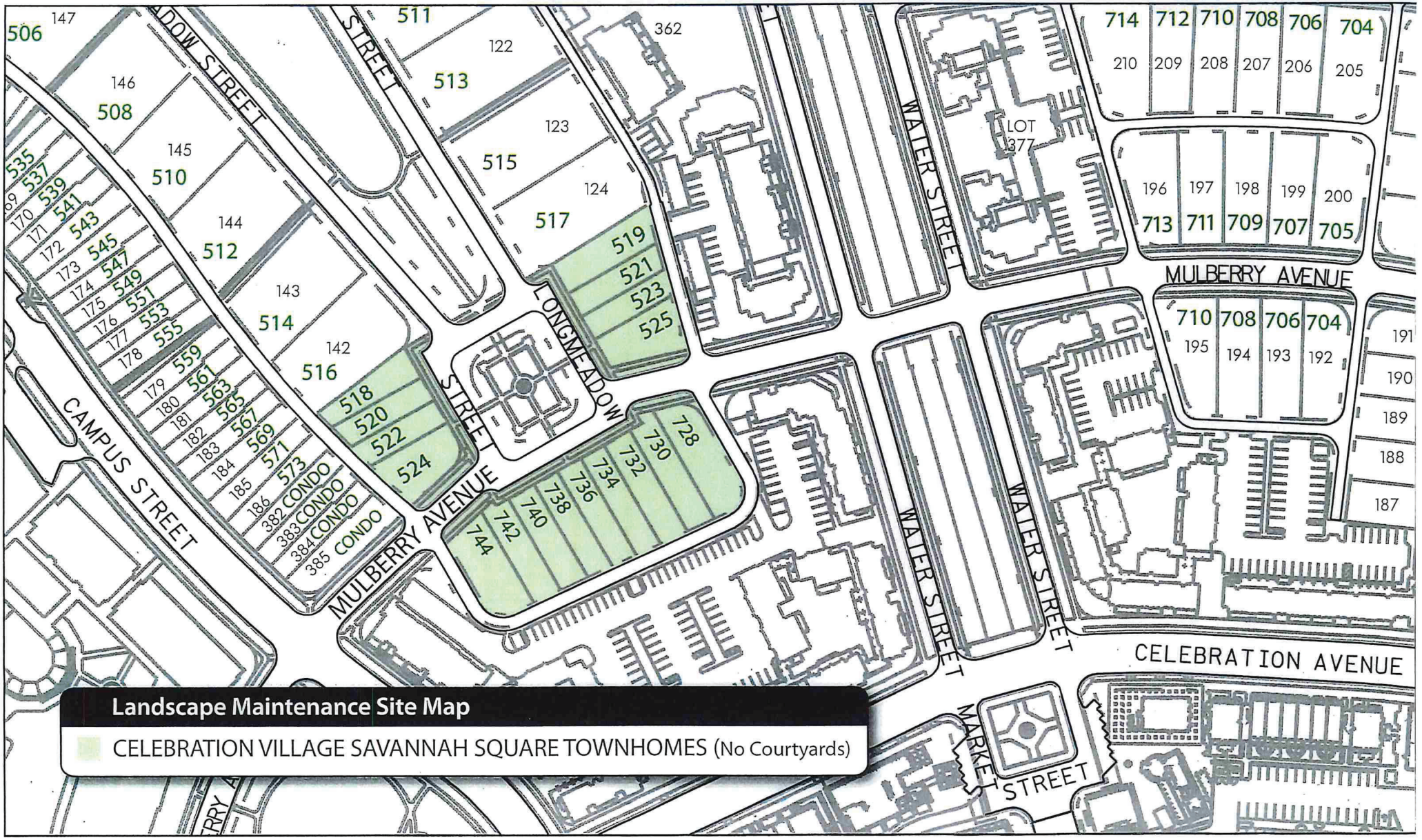

© 2017 Celebration Joint Committee, Inc

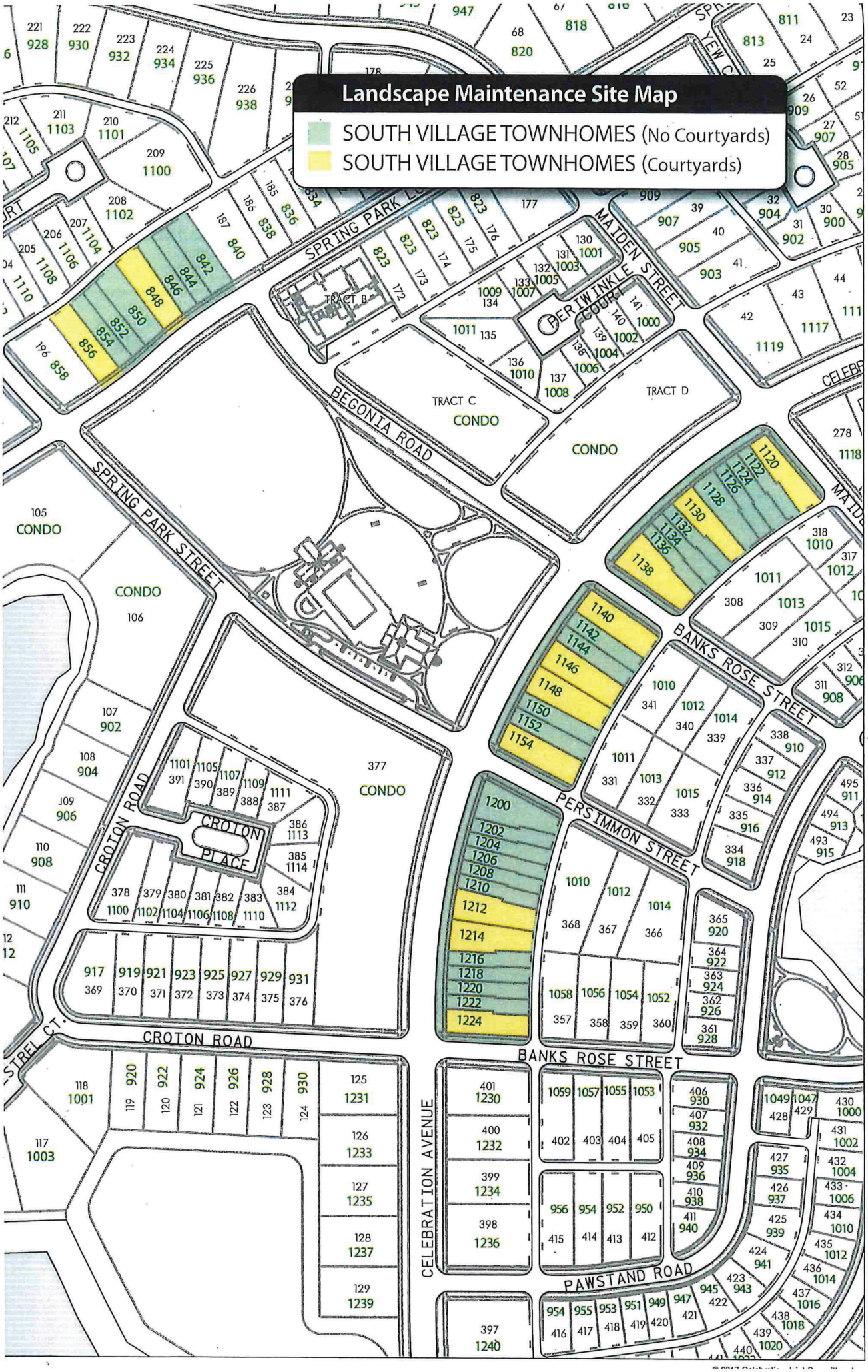
Landscape Maintenance Site Map
SOUTH VILLAGE TOWNHOMES (No Courtyards)
SOUTH VILLAGE TOWNHOMES (Courtyards)
SPRING PARK LANE
SPRING PARK STREET
MAIDEN STREET
PERIWINKLE COURT
BEGONIA ROAD
TRACT B
TRACT C
CONDO
TRACT D
CONDO
CONDO
CONDO
CROTON ROAD
CROTON PLACE
CROTON ROAD
PERSIMMON STREET
BANKS ROSE STREET
BANKS ROSE STREET
CELEBRATION AVENUE
PAWSTAND ROAD

- Town Homes
Spring Lake Gardens
SPRING LAKE
WEST SIDE
CELEBRATION BOULEVARD
EXISTING
WASHINGTON PALMS,
TYP
54 UA, TYP
RESOLUTE ST.
CAP ROCK DR.
CASTILE ST.
KIAWAH ST.
ALLEE MEWS
PALMETTO MEWS
CAP ROCK MEWS
TWIN OAKS MEWS
SPRING LAKE
PARK
1379
1377
1375
1373
1371
1544
1542
1540
1538
1536
1532
1530
1528
1526
1524
1522
1520
1518
1516
1514
1508
1506
1504
1502
1500
1578
1576
1574
1572
1378
1376
1374
1372
1370
1586
1584
1582
1580
1598
1596
1594
1592
1616
1614
1612
1610
1608
1606
1604
1602
1630
1628
1626
1624
1618
1640
1638
1636
1641
1643
1645
1647
1649
1603
1601
1599
1597
1595
1593
1591
1589
1587
1577
1573
1571
1561
1563
1565
1567
1569
1545
1547
1549
1551
1553
1555
1557
1366
1364
1362
1360
1358
1356
1354
1352
1525
1523
1515
1513
1511
1509
1501
1600
1598
1596
1594
1592
1590
1355
1353
1351
1597
1595
1593
1599
1591
1350
1348
1346
1344
1342
1340
9 MG, TYP
38 UPA, TYP
8' TRAIL
EXISTING POND
NEW POND BANK
ALLEY LIGHT TYP.
STREET LIGHT TYP.
STREET LIGHT
WITH SIGNAGE TYP.
MATCHLINE - SEE SHEET L1.20
SCALE: 1" = 40'
0
40
800

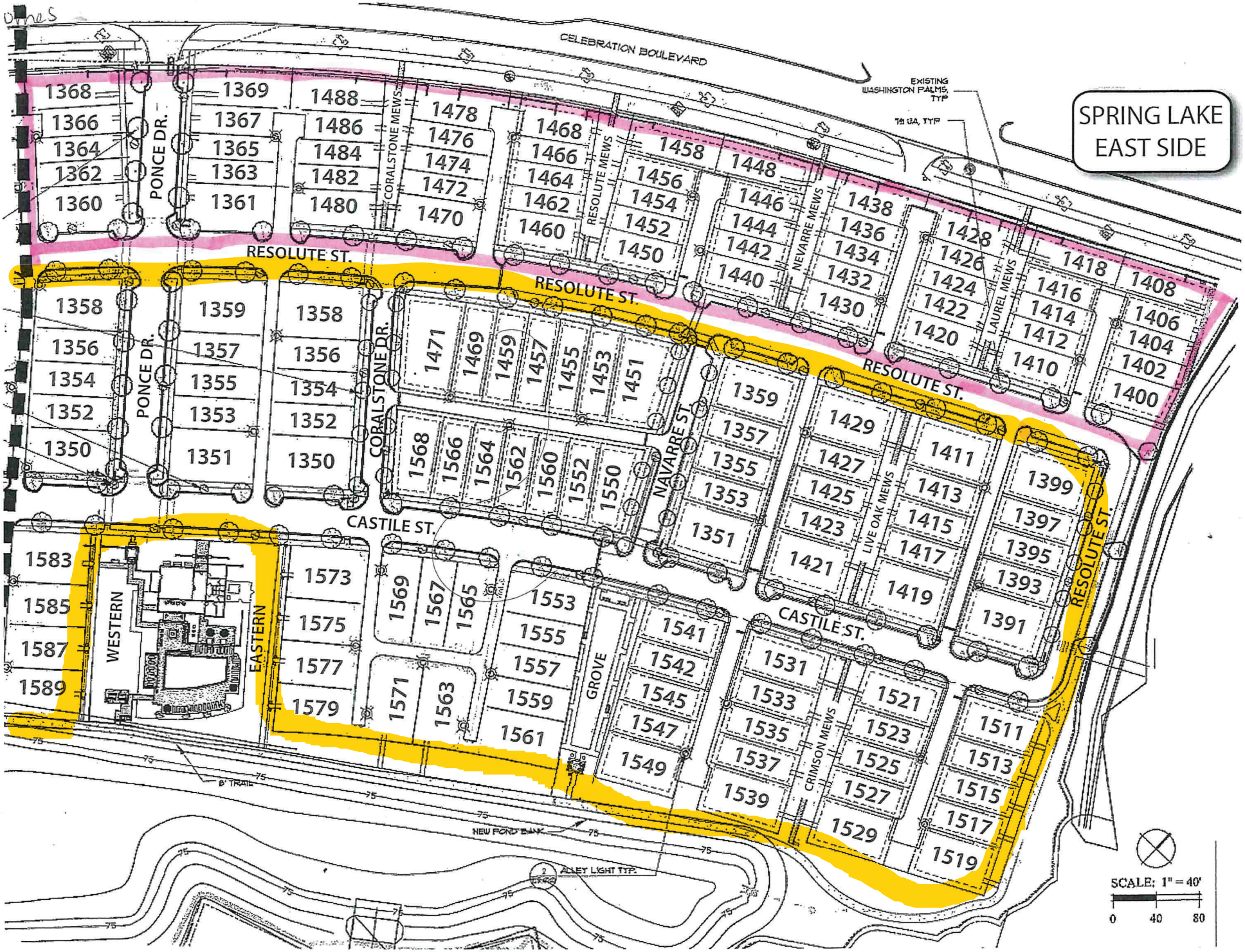
SPRING LAKE
EAST SIDE
CELEBRATION BOULEVARD
EXISTING WASHINGTON PALMS, TYP
78 DA, TYP
RESOLUTE ST.
CASTILE ST.
PONCE DR.
CORALSTONE DR.
CORALSTONE MEWS
RESOLUTE MEWS
NEVARRE MEWS
NAVARRE ST
LAUREL MEWS
LIVE OAK MEWS
CRIMSON MEWS
GROVE
WESTERN
EASTERN
8' TRAIL
NEW POND BANK
ALLEY LIGHT TYP.
SCALE: 1" = 40'
0
40
80

ISLAND VILLAGE AT CELEBRATION

May 2021. Artist's rendering only. Not meant to show exact community or landscaping details. Home site availbility subiect to change. ROC#249191B

Celebration Residential Owners Association, Inc. (CROA)

GENERAL TERMS & CONDITIONS

PROJECT DESCRIPTION

This request for proposal is for the Spring Pressure washing project in the Service Area Townhomes community of Celebration. The project consists of cleaning all – Sidewalks, curbs, walkways outside of gated back yards, driveways, front porch steps, PVC fencing outside surfaces only.

(CROA reserves the right to award contracts for any and all work which requires a separate bid based upon the nature of the work and its anticipated costs.)

FORMS & SPECIFICATIONS

Submitters are required to use the official "PROPOSAL FORMS", and all attachments itemized herein are to be submitted as a single document. Any variation from the minimum specifications must be clearly stated on the PROPOSAL FORMS.

HOW TO SUBMIT A PROPOSAL

One complete proposal form set (1 original) with all required documents as itemized and included herein are to be submitted in a sealed envelope, on the outside of which shall be prominently marked with the following identification: RFP # 2024 SPRINGPW with the name and address of the submitter. The RFP should be neat, professional in appearance and bound appropriately for the document's thickness. The original document shall have original signatures and clearly noted with *ORIGINAL* on the cover. All proposals must be hand delivered and/or mailed to CROA at 851 Celebration Ave, Celebration, FL 34747, by the date and time set forth herein. A copy must also be emailed to the CROA Representative at rose.vazquez@townhall.celebration.fl.us .

CONTRACTOR RESPONSIBILITY

Submitters are fully and completely responsible for the labeling, identification, and delivery of their proposals. CROA will not be responsible for any mislabeled or misdirected submissions, nor those handled by delivery persons, couriers, or the U. S. Postal Service.

- Submissions shipped by express delivery, or in overnight or courier envelopes, boxes, or packages must be prominently marked on the outside of such envelopes, boxes, or packages with the sealed proposal identification.

- Proposals that are incomplete, unbalanced, conditional, obscure, or which contain additions not called for, alterations, or irregularities of any kind, or which do not comply with these documents may be rejected at the option of CROA.

PROPOSAL DOCUMENTS REQUIRED

The following documents and forms in the following arrangement must accompany each proposal or alternate proposal submitted:

- Bid Response Form.
- Disclosure of Subcontractors, Sub-Consultants and Suppliers and Statement of Subcontractor experience.
- Proposer Certification/Addenda Acknowledgement Form.
- The General Terms and Conditions statement must be signed and returned with the proposal form.
- A sworn, notarized Statement of Contractor's Experience, Equipment and Personnel.
- W-9 and Certificate of Insurance for Contractor and all Subcontractors.
- Any and all applicable licenses or certifications must be included. This can also include any additional certifications or education of the organization or of staff who will be performing the actual work.

INSURANCE REQUIREMENTS

The successful Contractor upon Notice of Award will furnish a Certificate of Insurance. The Certificate(s) shall be completed by the Contractor's authorized agent and submitted to CROA, with CROA a named additional insured. The successful Contractor shall not commence any work in connection with the Agreement until it has obtained all of the following types of insurance and shall maintain such insurance as will protect him/her from claims which may arise out of or result from the vendor's operations under the terms and conditions of the RFP.

Contractor shall, throughout the performance of its Services pursuant to this Agreement, maintain:

a. Occurrence basis comprehensive general liability insurance (including broad form contractual coverage) and automobile liability insurance, with minimum limits of $1,000,000, respectively, combined single limit per occurrence, protecting it and Owner from claims for bodily injury (including death) and property damage which may arise from or in connection with the performance of Contractor's Services under this Agreement or from or out of any act or omission of Contractor, its officers, directors, agents, and employees; and

b. Workers' compensation insurance as required by applicable law (or employer's liability insurance with respect to any employee not covered by workers' compensation) with minimum limits of One Hundred Thousand Dollars ($100,000) per occurrence.

All such insurance required in Paragraph a. shall be in companies and on forms acceptable to Owner and shall provide that the coverage thereunder may not be reduced or canceled unless thirty (30) days prior written notice thereof is furnished to Owner. Certificates of insurance (and copies of all policies, if required by the Owner) shall be furnished to the Owner. In the event of any cancellation or reduction of coverage, the Contractor shall obtain substitute coverage as required under this Agreement, without any lapse of coverage to Owner whatsoever.

Contractor shall defend (if requested by Owner), indemnify, and hold Owner and its officers, directors, agents, employees and assigns harmless from and against any and all claims, demands, suits, judgments, losses, or expenses of any nature whatsoever (including attorneys' fees) arising directly or indirectly from or out of: any act or omission of Contractor, its officers, directors, agents or employees; any breach of Contractor's representations as set forth in this Agreement; or any other failure of Contractor to comply with the obligations on its part to be performed under this Agreement. The provisions of this paragraph shall survive the expiration or earlier termination of this Agreement.

CROA reserves the right to modify the insurance requirements set forth at any time during the process of solicitation or subsequent thereto.

EXAMINATION OF PROPOSAL DOCUMENTS

- Each Contractor shall carefully examine the Documents & Specifications and other applicable forms and inform himself/herself thoroughly regarding any and all conditions and requirements that may in any manner affect cost, progress, or performance of the work to be performed under the Contract. Ignorance on the part of the Contractor will in no way relieve him/her of the obligations and responsibilities assumed under the Contract.

- Should a Contractor find discrepancies or ambiguities in, or omissions from the Specifications, or should he/she be in doubt as to their meaning, he/she shall at once notify the Operations Manager, in writing.

INTERPRETATIONS, CLARIFICATIONS AND ADDENDA

In case any Proposer fails to acknowledge receipt of such addenda or addendum, his/her proposal will nevertheless be construed as though it had been received and acknowledged and the submission of his/her Proposal will constitute acknowledgment of the receipt of same. All addenda are a part of the Proposal Documents, and each Proposer will be bound by such addenda, whether or not received by him/her. It is the responsibility of each Proposer to verify that he/she has received all addenda issued before Proposals are opened.

In the case of unit price items, the quantities of work to be done and materials to be furnished under this Proposal/Contract are to be considered as approximate only and are to be used solely for the comparison of Proposals received. CROA does not expressly or by implication represent that the actual quantities involved will correspond exactly therewith; nor shall the Proposer plead misunderstanding or deception because of such estimate or quantities of work performed or material furnished in accordance with the Specifications and

other proposal documents, and it is understood that the quantities may be increased or diminished as provided herein without in any way invalidating any of the unit or lump sum prices proposal.

ALTERNATES

When certain items of equipment and/or materials are specified and/or described as the product of a particular manufacturer together with any required additional information such as model number, size, or catalog number, only such specific items may be used in preparing the Proposal, except as hereinafter provided.

CHANGES / MODIFICATIONS

CROA reserves the right to order changes in the scope of work and resulting contract. The successful Proposer has the right to request an equitable price adjustment in cases where modifications to the contract under the authority of this clause result in increased costs to the Contractor. Price adjustments will be based on the unit prices proposed by the Contractor in response to this solicitation. Any contract resulting from this solicitation may be modified upon written and mutual consent of both parties.

GOVERNING LAWS AND REGULATIONS

The Proposer is required to be familiar with and shall be responsible for complying with CROA Policies and Procedures, CROA rules, all federal, state, and local laws, ordinances, rules and professional standards or regulations that in any manner affect this solicitation, the selection process, protests, award of contract, contract management or any other activity associated with this solicitation and the subsequent work required of the successful Proposer.

CONTRACT NEGOTIATION

The Selection Committee shall rank all received proposals and provide the CROA Representative with the rankings and a recommended Contractor(s). If deemed prudent or necessary, the CROA Representative will be authorized to negotiate with the top ranked firm. The proposal signed by the successful Proposer along with documentation included in the proposal as required by this solicitation and other additional materials submitted by the Proposer and accepted by CROA shall be the basis for negotiation of a contract addressing the requirements of the solicitation. The resulting contract will be approved by CROA Board of Directors.

ADDITIONAL TERMS AND CONDITIONS

No additional terms and conditions included with the proposal response shall be evaluated or considered and any and all such additional terms and conditions shall have no force and effect and are inapplicable to this proposal. If submitted either purposefully through intent or design or inadvertently appearing separately in transmitting letters, specifications, literature, price lists or warranties, it is understood and agreed the general and special conditions in this solicitation are the only conditions applicable to this proposal and the Proposer's authorized signature affixed to the proposal attests to this.

Agent Name	Title	Signature	Date

Celebration Service Areas Scope of Work: Exhibit A

Chosen vendor will complete all work in a professional manner according to the standard practices. The contract amount includes all chemicals, materials, and labor to complete the work. Any changes in the written contract will become an extra charge and will only be executed upon written and properly authorized orders.

Daily communication to the assigned CROA Representative must be given of what buildings and or units have been completed for inspection. Assigned CROA Representative will supply a list of units that are requesting the non-use of any chlorinated chemicals to their unit ahead of the start of the project. Any damage to units and or property will be held liable to the vendor. Before pictures of all areas must be taken and supplied to the CROA Representative to protect both the resident and vendor. The CROA Representative will document services by taking after-after photos of each inspected area within 24 hours of the communication from the vendor that the area has been completed.

All work must be completed within 35 days of the scheduled work to be started, giving an additional five business days due to the possible weather delays. Work must be completed satisfactorily by TBD unless otherwise approved by the CROA Representative.

Areas of Service – Sidewalks, curbs, walkways outside of gated back yards, driveways, front porch steps, PVC fencing outside surfaces only. **Building exterior cleaning is not included in this package.**

Payment Terms: Client will pay 100% of the contract amount upon satisfactory completion of services. Any other payments terms must be approved and amended to the contract prior to commencement of the work (see Addendum of Method of payment).

Service Area	**Cleaning Price**
Academy Row & MHG Townhomes	Not for bid, PW completed in 2024 Paint Project
Roseville Corner	Not for bid, PW completed in 2024 Paint Project
Greenlawn Townhomes	Not for bid, PW completed in 2024 Paint Project
Blue Sage	$ 1,562.00
Savannah Square	$1,592.00
Charleston Place	$1,804.00
South Village	$4,224.00
Parkview	$7,036.00
Oak Pond	$998.00
Golden Astor	$715.00
East Village	$524.00
Spring Lake Townhomes	$6,370.00
Island Village	$17,550.00
Total	$42,375.00
Payment Terms	Each Service Area will be individually invoiced- Due upon completion
Billing Information Submit all invoices to accountspayable@ciramail.com	Grand Manors (Celebration) 851 Celebration Avenue Celebration, FL 34747

_____ _____

Celebration Residential Owners Association Date

CENTRAL PAINTING & WATERPROOFING, LLC _____

(Company selected goes here) Date

Vendor Invoice and Payment Processing Instructions

Introduction

GrandManors is the management company that manages the administrative and financial operations of the community association that contracted your services and is responsible for processing all invoices and payments for the community association.

GrandManors is committed to promptly paying you for your services to the community association – and in order to do so, we have provided the following invoice and payment processing instructions.

We look forward to building a positive working relationship with your company for the benefit of the community.

Required Documents

IRS Form W-9

GrandManors requires a completed IRS Form W-9 to be on file for all vendors. Please submit a completed W-9 if this is the first time you are providing services to a GrandManors association. Click here to download a W-9. Upon completion of the W-9, please scan and email the attachment to accountspayable@ciramail.com.

Certificate of Insurance

GrandManors requires an up to date Certificate of Insurance to be on file for all vendors providing on-site services to the association (e.g. landscaping, repair and maintenance, pool services, etc…). Please ensure that you have submitted an up-to-date Certificate of Insurance for **each** Association that you service. Please refer any questions regarding insurance requirements to the Community Association Manager that procured your services.

Account Name and Billing Address

The account name and billing address should be styled as follows:

Celebration Residential Owners Association

c/o GrandManors

P.O. Box _803555

Dallas, TX 75380-3555

Invoice Information Requirements

Please include the following information on your invoice:

Association Legal Name

Invoice Number

Invoice Date

Remittance Address

GrandManors Work Order Number (if applicable)

Service date(s)

Description of Service(s) Provided

Contact information (address, phone number, and e-mail address)

Invoice Submission Procedures

Invoices may be submitted by one of three methods:

Electronic submission using our web site www.ciranet.com/vendorportal/default.aspx

(preferred method and fastest processing)

Invoice and Payment Processing Procedures

GrandManors processes invoices and payments every business day in an effort to process payments as quickly as possible. GrandManors utilizes a proprietary automated work flow system to process invoices for payment and has processes and controls in place to safeguard the association's assets and maintain an appropriate audit trail. These processes entail each and every vendor invoice going through multiple steps and approvals prior to disbursement. This length of the process can vary for each invoice depending upon numerous factors including ensuring that the vendor provided all necessary and correct information and their product / service was satisfactory. It will generally take up to 30 days for a vendor to receive payment after receipt of an invoice, including mail time, unless there are issues with the product, service, vendor, or cash position of the association.

GrandManors considers utility, insurance, leasing, and financial services companies to be "**Institutional Vendors**" and can pay invoices received from such vendors in fewer than 30 days if required.

All other vendors are considered "**Non-Institutional Vendors**", and the 30 day payment term applies. GrandManors recommends that our association clients not contract services from Non- Institutional Vendors who impose unreasonable or restrictive payment terms. Requiring payment in fewer than 30 days is not standard in any industry and is considered unreasonable.

"**Unreasonable Fees**" are fees or charges assessed by Non-Institutional Vendors because such vendor required payment under more restrictive terms than outlined here (e.g. a late fee charged because the vendor required payment in 20 days).

In an effort to protect the interests of our clients, it is standard operating procedure for the GrandManors AP Service Group to initially refuse payment of any amounts they deem to be Unreasonable Fees.

Under special circumstances the GrandManors AP Services Group can process "**Rush"** check requests in fewer than 30 days. A Rush request can be processed as quickly as 24 – 48 hours, but additional fees billable from GrandManors to the Association may apply.

Further explanation of the 30 day term:

This assumes the invoice is submitted to GrandManors via regular mail

If the invoice is not mailed to the correct GrandManors PO Box, check processing will be delayed

If the envelope is not postmarked on the same day as the invoice date, then expect 30 days from the postmarked date, not 30 days from the invoice date

If the invoice is submitted via upload on the Grand Manors home page, this may expedite processing by 5-7 days (so payment may be expected in 23-25 days, instead of 30 days)

If the invoice is submitted via fax to 214-545-5237 or via email to accountspayable@ciramail.com,

this may expedite processing by 3-5 days (so payment may be expected in 25-27 days, instead of

30 days)

Other Common Factors:

New Vendors. For the first invoice received from a new Vendor, expect an additional 5 days to

process (or longer if the Vendor does not submit all required paperwork)

Second Signers. For checks to vendors that require a second signature from a Board Member, the

Board Member should expect to receive the check from GrandManors in the timeline specified herein;

The Vendor will then receive payment according to the Board Member's schedule.

Insufficient Funds. If an association has insufficient funds, check processing will be delayed.

Vendor ACH Enrollment Form & Process

GrandManors via CiraConnect offers vendors to receive invoice payment via Automated Clearing House (ACH). Payments will be electronically deposited into your designated bank account via ACH upon full approval of the invoice(s) in two days or less and avoid your check lost in the mail. Once funds are transmitted, you will receive an email. All the above documents and procedures are still required for each vendor and their invoices.

See the next page for the Vendor ACH Enrollment Form. Once completed, please email the form, a copy of a voided check (showing your bank, routing & account number), and any documents listed above (if not previously submitted to our team) to: vendorach@ciramail.com. For questions Ph: 855-877-2472 Opt. 2.

Contact Information

If you have any questions, comments, or concerns related to our invoice and payment processing procedures, please contact GrandManors at accountspayable@ciramail.com or per below:

Toll Free Phone: 866-4-RealService (866-473-2573)

Fax: 214-545-5237

www.GrandManors.com

CiraConnect
Vendor ACH Enrollment Form

CiraConnect, LLC offers our client management company's vendors the option of receiving payments via Electronic Funds Transfer (EFT). Payments will be electronically deposited into your company's designated bank account through ACH (Automated Clearing House) upon full approval of the applicable invoice(s). An ACH payment remittance advice will be delivered via email once funds are transmitted.

By enrolling in ACH, you will be able to take advantage of several benefits:

- √ ACH fulfillment is a faster method of payment
  - Payments can be credited to your account in two business days or less
  - Banks will not hold ACH payments for large amounts. Funds will be available as soon as the payment is credited to the account.

- √ ACH eliminates the need to process paper checks
  - Payments cannot be delayed or lost in the mail.
  - Accounting team members save valuable time by not needing to deposit payments received by mail.

All vendor disbursement requirements mandated by the management company and/or community association must still be met, and the invoice/disbursement must have met all internal approvals required by the management company and community association before payment will be transferred.

Once this form is fully executed and returned, the information will be verified and ACH will go into effect for any approved invoices following ACH verification. All forms must be accompanied by a W9, including current vendors of one or more community associations, before ACH will go into effect.

Please be sure to clearly identify any and all community associations you are engaged with and authorizing to disburse via ACH. Any community associations not listed will continue to pay via paper check.

If you have any questions or need additional information, you are encouraged to contact your management company representative directly or you may contact the CiraConnect Accounts Payable Shared Services Group at:

vendorach@ciramail.com[1]

855-877-2472, Option 2

Please email or fax the completed form along with a **VOIDED CHECK** and **W9** to vendorach@ciramail.com or 866-919-5696. **NOTE: A voided check or bank confirmation letter and W9 is required to process this form.**

[1] *Please note that this email is NOT intended for invoice submission, but ACH enrollment only. Invoices sent to this email address will NOT be processed.*

Vendor ACH Enrollment Form

This form is used for Automated Clearing House (ACH) payment related information to your financial institution. You must check with your financial institution to confirm funds have been deposited. Information on this form is subject to additional verification.

VENDOR INFORMATION

☐ **New Request** ☐ **Change Request**

Vendor Name		Taxpayer ID (Required)		
Address		City	ST	Zip
Accounting Contact Name	Telephone		Fax	
Community Association(s) Authorizing to Receive ACH Payments From				
Email Address (please print clearly) - *Required to receive remittance				

☐ **Association listed only** ☐ **All Associations at Branch** ☐ **All Associations at Management Company**

FINANCIAL INSTITUTION INFORMATION

Bank Name			
Address	City	ST	Zip
Account Name	ACH Routing No. (9 Digits)	Account No.	
Account Type ☐ Checking ☐ Savings			

CERTIFCATION

I certify I am responsible for notifying any changes to the information provided above to CiraConnect, LLC.

I certify that I agree to immediately return any erroneous payments that may occur as a result of payment via ACH.

I certify the information provided on this form is true and correct, and that I, as an authorized representative for the above-named company, hereby authorize CiraConnect, LLC to electronically deposit payments to the designated bank account. This authority remains in full force until written notice of change or cancelation is received by CiraConnect, LLC. CiraConnect, LLC reserves the right to cancel or suspend this authorization at any time.

AUTHORIZATION

Authorized Official Name _____ Signature _____

Title _____ Date _____

NOTE: Changes to bank account information after initial setup will require additional security steps.

Celebration Residential Owners Association (CROA)

BID RESPONSE FORM

Name of Firm Submitting Proposal:

CENTRAL PAINTING & WATERPROOFING LLC

(Print or Type)

Name of Person Submitting Proposal:

HERB VERNON, OPERATIONS MANAGER

(Print or Type)

Email of Person Submitting Proposal:

HERB@CENTRALPW.COM

(Print or Type)

Phone of Person Submitting Proposal:

561-727-9436

(Print or Type)

I HERB VERNON, on behalf of CENTRAL PTG & WATERPROOFING LLC, submit the following bids as indicated below:

Celebration Residential Owners Association, Inc. (CROA)

DISCLOSURE OF SUBCONTRACTORS AND SUPPLIERS

Name of Firm Submitting Proposal:

CENTRAL PAINTING & WATERPROOFING, LLC

(Print or Type)

Name of Person Submitting Proposal:

HERB VERNON

(Print or Type)

Name of Firm Submitting Proposal:

(Print or Type)

Name of Person Submitting Proposal:

(Print or Type)

Please list all Sub-contractors and Suppliers to be used in connection with performance of this contract. Attach additional sheets as necessary.

Name of Firm or Agency: CELEBRATION HARDWARE, BENJAMIN MOORE Address: 57 BLAKE BLVD. CELEBRATION , FL 34747	Telephone: 407-446-9421
Contact Name: HANS FIDEAU	Title: REPRESENTATIVE

This document must be completed and returned with your Submittal.

Celebration Residential Owners Association, Inc. (CROA)

Name of Firm or Agency: SHERWIN WILLIAMS PAINTS Address: ORLANDO NORTH ORANGE BLOSSOM COMM #704328 4206 N ORANGE BLOSSOM TRL STE 6 ORLANDOFL32804-2764 (407) 291-8047	Telephone: 407-468-9673
Contact Name: JEFF DeCHURCH	Title: SALES REPRESENTATIVE, ORLANDO DISTRICT

Name of Firm or Agency: Address:	Telephone:
Contact Name:	Title:

Name of Firm or Agency: Address:	Telephone:
Contact Name:	Title:

Name of Firm or Agency: Address:	Telephone:
Contact Name:	Title:

This document must be completed and returned with your Submittal.

Celebration Residential Owners Association, Inc. (CROA)

STATEMENT OF CONTRACTOR'S EXPERIENCE, EQUIPMENT AND PERSONNEL

(Contractor may also provide any supplemental company or personnel information that will assist CROA in evaluating your proposal such as a corporate organizational chart showing area of responsibility for personnel listed on this form).

CONTRACTOR: CENTRAL PAINTING & WATERPROOFING, LLC

DATE: MARCH 3, 2024

1. How many years has your organization been in business as a painting contractor under your present business name?

   FILED JANUARY 1, 2016

2. List all previous business names of your organization:

3. How many years' experiences in painting services?

   Prime Contractor: 8 YEARS

   Subcontractor: IN EXCESS OF 30 YEARS

4. List all officers and directors of your organization:

Name	Position Held
HERB VERNON	OPERATIONS MANAGER
MARZETTA VERNON	VICE PRESIDENT

5. Have you ever failed to complete any work awarded to you in the last 3 years? ____ Yes X No

   If yes, where, and why?

EXPERIENCE

1. Describe any experience of the principal individuals (Foremen, Superintendents, etc.) who are responsible for the actual painting work of your organization?

DAVID ROMERO	SUPERVISOR	
Name	Position	
PAINTING, MASONRY, & CARPENTRY	25+	8 YEARS
Type of Work	Years' Experience	Years with Firm
Name	Position	
Type of Work	Years' Experience	Years with Firm
Name	Position	
Type of Work	Years' Experience	Years with Firm
Name	Position	
Type of Work	Years' Experience	Years with Firm

2. List/describe five (5) painting contracts/projects of similar size and scope that you currently have or have recently completed.

This document must be completed and returned with your Submittal.

Project: CRANES ROOST
Location: ALTAMONTE SPRINGS
Date: COMPLETED DECEMBER 2023
Contract Amount: $107,040
Contract Name, Phone Number, Fax Number:
MS. MARLO SANDERS, 407-788-6700 EXT 51229

Project: THE GREENS
Location: ORLANDO, FL
Date: COMPLETED APRIL 2023
Contract Amount: IN EXCESS OF $300,000
Contract Name, Phone Number, Fax Number:
MS. DENISE MABAT 407-788-6700 EXT 51305

Project: TOWNES OF SOUTHGATE
Location: ORLANDO, FL
Date: COMPLETED FEBRUARY 2024
Contract Amount: IN EXCESS OF $300,000
Contract Name, Phone Number, Fax Number:
MS. LINDSEY THIGPEN 407-788-6700 EXT.51421

Project: PLANTATION VILLAGE,
Location: LONGWOOD, FL
Date: COMPLETED JULY 2022
Contract Amount: 55,000
Contract Name, Phone Number, Fax Number:
JOE PALADINO, 407-788-6700 EXT51223

Celebration Residential Owners Association (CROA)

This document must be completed and returned with your Submittal

CONTRACTOR'S AFFIDAVIT

State of Florida
County of Lake

Before me personally appeared, Herb Vernon who (title) is *Operations Mgr.* of *Central Painting & Waterproofing, LLC,* being duly sworn, deposes and say that the foregoing statements are a true and accurate statement of the position of said organization as of the date thereof, and, that the statements and answers to the foregoing experience questionnaire are correct and true as of the date of this affidavit; and, that he/she understands that intentional inclusion of false, deceptive, or fraudulent statements of this application constitutes fraud; and, agrees to furnish any pertinent information requested by CROA deemed necessary to verify the statements made in this application or regarding the ability, standing and general reputation of the applicant.

Personally appeared before me, in physical presence.

Personally Produced Identification **V655-333-50-303-0 FL driver's license**

Herb Vernon, Central Painting & Waterproofing, LLC.

Signature

Sworn to and subscribed before me this 24 day of May, 2022

NOTARY PUBLIC
JAN GRANT
Notary Public, State of Florida
Commission# GG 269784
My comm. expires Oct 21, 2022

NOTARY PUBLIC – STATE of FLORIDA
(Signature of Notary Public)

Jan Grant
(Print Name of Notary Public)

This document must be completed and returned with your Submittal

March 12, 2024

Leigh Quinn
2180 W SR 434, Suite 5000
Longwood FL 32779
407-788-67-00 extension 51302.

To Whom It May Concern,

I have contracted with Central Paining on many of the communities I have managed.

Central Painting has completed the work to satisfaction, keeping the lines of communication open throughout, and provided an overall positive and professional experience.

I highly recommend using Central Painting for any painting/renovation needs. The combination of their professionalism, knowledge, and experience made for a successful project.

Leigh Quinn, LCAM
Division President
Sentry Management

Signature MANAGEMENT SOLUTIONS

686 N. Hunt Club Blvd., Suite 180
Longwood, FL 32779
Tel: 407-379-1455 Ext:101 • Fax: 407-379-1456
www.sigmgmt.com

March 13, 2024

To whom it may concern:

Central Painting has provided painting, stucco repair, exterior reconstruction and pressure washing for multiple homeowner associations in Kissimmee that are both condominiums and townhomes. The work has always been reasonably priced and the performance very satisfactory. Exceptional customer service with the owners as well as the managers, timely submission of proposals, care of the property, excellent work, completion on time and follow-through have been consistent with Central Painting for each job performed.

MaryJo LoCascio, PCAM

Association Manager

REGAL
PAINT CENTERS

June 24, 2021

The Sea Brook Place Condominium
Mr. Wayne Peatt
Jupiter, FL

RE: Reference Letter—Mr. Herb Vernon
Central Painting and Waterproofing, LLC

Dear Mr. Peatt,

My name is Steven Rasmussen, Vice President of Regal Decorating and Paint Center, Inc. I also serve as the director of our Central Florida territory, where I have had the privilege of working with Mr. Herb Vernon, owner of Central Painting and Waterproofing. Regal Paints has seventeen paint store locations from Boca Raton through Winter Park in the Central Florida area. We are the Largest Benjamin Moore Paint supplier south of New York City and we are glad to have the opportunity of working with the Sea Brook Condominium Association on its upcoming repaint project. Mr. Don Cobb is the Regal Paint Representative and Mr. Rudy Forjan is the Benjamin Moore Sales Associate working on the paint specifications and the Color Renderings for your project.

Mr. Herb Vernon has been a Regal Paint/Benjamin Moore Paint customer for five years in the Central Florida market. We have done over a dozen major repaint projects with Central Painting and Waterproofing and on every project, they have performed in a very professional manner and have completed the project on time and according to the specification and scope of work. They also have an excellent payment history and always pay for materials according to our net EOM terms. I have found Mr. Vernon to be a pleasure to work with and he has always been available to take my call.

I can highly recommend Mr. Vernon and Central Painting and Waterproofing, as professionally competent to perform the work at Sea Brook Place Condominium.

Sincerely,

Steve Rasmussen
Vice President and Director

Corporate Office ♦ 2740 South Dixie Highway ♦ West Palm Beach, FL 33405
Phone: (561) 659-9034 ♦ Fax: (561) 659-7256 ♦ www.regalpaint.com

March 29, 2016

To whom it may concern,

I would like to take this opportunity to recommend Herb Vernon and his company:

Central Painting and Waterproofing LLC.

Apopka, Florida 32712

Herb@centralpw.com

I have known Herb for well over twenty years and have worked with him on many projects and consider him one of the best, and most conscientious painting and waterproofing contractors in the business. The last project we did with him with PPG/Porter Paints, was a complicated multi family condominium exterior repaint with wood replacement and extensive patching and caulking and repair. Herb and his crews did a fantastic job and went out of their way to make the property look fantastic. I would not hesitate to recommend them on any painting and waterproofing or reconstruction project.

Please call me or email me with any questions at 321-303-7933 or BradWagner@ppg.com.

Thanks much,

Sincerely,

Brad Wagner-Senior Sales Representative

PPG/Paints, 460 Hwy 434 N.

Altamonte Springs, Fl. 32712

Cranes Roost Village Condominium Association
556 Cranes Way
Altamonte Springs, Florida 32701

December 5, 2023

This letter is to express the deep appreciation of our Board of Directors to Central Painting for the recently-completed painting of our seven multistory buildings and clubhouse.

Central Painting had done a quality job of painting our community nearly a decade ago, so we were pleased that they were the low bidder (of five) this time.

We were provided a detailed timeline and a briefing on exactly what to expect. They notified all of our residents as to when vehicles needed to be moved, etc., and the on-site crew was on time, professional, and efficient.

After completion we offered our 200 residents the opportunity to point out touch ups needed and spots missed. To our amazement we received zero responses!

We were very pleased with our results and would highly recommend Central Painting to any organization needing a professional company to do a large and complex painting job.

Thomas R. Brennan
President
Board of Directors

January 31st 2021

To whom it may concern,

Last year, our Association decided to do remedial work on our 30 year old buildings. There were nine buildings in total to be done and these were all wooden structures. The work consisted primarily of replacing the existing wood composite siding with Hardie Plank. Our management company recommended that we use Herb Vernon of Central Painting & Waterproofing, LLC for the project. We followed their recommendation and I'm happy to say that we never for a moment regretted that decision.

At the beginning of the project, we met with Herb and discussed what we wanted his company to do for us and how we expected to do business with him. This set the foundation for our relationship such that in the 4 months that it took to complete the job, there were no misunderstandings as we were in constant communication with each another. The job went smoothly and we were thoroughly satisfied with the results.

From our experience with Herb doing this job for us, we would not hesitate to recommend his company to anyone who needs the services of a General Contractor.

Regards,

Edward Goddard,
President,
Windsor at Sabal Walk Condominium Association,
Longwood, Florida

BRANTLEY TERRACE CONDOMINIUM ASSOCIATION, INC.
C/O SENTRY MANAGEMENT, INC.
2180 West SR 434, Suite 5000
Longwood, Florida 32779-5044
(407) 788-6700 Ext. 51314 Fax (407) 788-7488

November 1, 2020

To whom it may concern,

The Brantley Terrace Condominium Association would like to take this opportunity to provide feedback on Central Painting and Waterproofing and Herb Vernon.

Central Painting was awarded the contract to Paint, Seal and repair drywall for 7 buildings along with the Fitness Center. Central Painting provided the association with courteous, professional and top-quality workmanship.

Central Painting was diligent in gaining access to the units in order to complete the job and went above and beyond on several occasions. The association also received several compliments from homeowners.

The project was finished in record time. Brantley Terrace Condo Association appreciates the detail, quality, and flexibility provided by Central Painting and Waterproofing.

Should you have any questions, please contact our community manager, Jamie Bowling at (407) 788-6700 extension 51314 or email her at jbowling@sentrymgt.com

On behalf of the Board of Directors,

Jamie Bowling

LCAM

Villages of Windmeadows Condominium Association
200 Windmeadows Street
Altamonte Springs, Fl 32701

January 7, 2017

To Whom It May Concern:

Central Painting and Waterproofing LLC has provided us with the professional help we needed. Their job supervision and employee efficiency showed in their quality work. We have been very pleased with the work they have completed for us and look forward to working with them again in the future.

Respectfully,

Melanie Auville
Board President

To whom it may concern:

Herb Vernon of Central Painting & Waterproofing, LLC, was awarded the contract to perform wood repair and paint the seven buildings at Cranes Roost Village Condominiums in Altamonte Springs, Florida. Three of the buildings and the carports had the wood siding replaced with Hardy Board. At the time I was the president of the Condominium Owners Association.

Herb, myself, and various board members met on a daily basis to discus the work in progress and discussed the repairs that needed to be performed after the siding was removed and went through the approval process.

Herb provided extremely helpful insight as the work progressed and new repairs were necessary as the old material was removed. He was very thorough and diligent making sure the job was done properly the first time. We had no issues with the items he brought to our attention.

The total job turned out great, we even got an extra year warranty on the paint job. Herb and his crew were great. I would recommend him to perform any work that needs to be done right.

Sincerely,

James Johnson
321-274-5246
sknij@yahoo.com

SENTRY management. COMMUNITY ASSOCIATION MANAGEMENT

CELEBRATION • FLORIDA • EST • 1994 ®

Brantley
Terrace

LIBERTY SQUARE
AT HOMETOWN

THE OVERLOOKS

SWEETWATER
CLUB

Vick's Landing

Springs
OFFICES

CRANE'S
ROOST
VILLAGE
CONDOMINIUM

200
WINDMEADOWS

WEKIVA SPRINGS
RESERVE

The Greens
CONDOMINIUMS
WELCOME HOME

NORMANDY
PLACE

SABAL WALK

CLUB
Cortile

Madison
PLACE

CHANCELLOR'S
ROW
AN OWNERSHIP COMMUNITY

Agreement No: Reviewed by:
RFP#2024SPRINGPW
Project: Service Area Spring
Scope of Services: Pressure Washing

SERVICES AGREEMENT

THIS AGREEMENT is made effective as of the _____ by and between Celebration Residential Owner's Association, Inc. (herein referred to as the "Owner"), whose mailing address is 851 Celebration Avenue, Celebration, FL 34747, Attention: **President,** and _____. (herein referred to as the "Contractor"), whose mailing address is: _____.

WITNESSETH

WHEREAS, Owner desires to employ the services of Contractor for **2024 Service Area Spring Pressure Cleaning** to perform the hereinafter described Services, and Contractor desires to be so employed. Costs shall remain fixed based upon the estimates provided.

NOW THEREFORE, in consideration of the premises and mutual covenants and obligations contained in this Agreement, the parties agree as follows:

1. DEFINITIONS.

a. Agreement. The Agreement consists of this Services Agreement, Estimates, the form of Changed Service Authorization, the form of General Release, and all other documents enumerated on the List of Exhibits set forth below. The Agreement represents the entire and integrated Agreement between the parties hereto and supersedes all prior negotiations, representations, or agreements, either written or oral. The Agreement may be amended or modified only as set forth below in Article 6.

b. Services. The term "Services" as used in this Agreement shall be construed to include all Services set forth in Exhibit A, all obligations of Contractor under this Agreement and where any Changed Service Authorizations have been issued pursuant to Article 6 of this Agreement, the changed Services set forth therein.

2. SCOPE OF SERVICES.

a. A description of the nature, scope, and schedule of Services to be performed by Contractor under this Agreement in accordance with the following List of Exhibits:

i. Exhibit A, Scope of Services, 1 Page

ii. Exhibit B, RFP, and Pricing sheet

iii. Exhibit C, Changed Service Authorization form, 1 page.

iv. Exhibit D, General Release form, 1 page.

3. BASIS FOR COMPENSATION AND PAYMENTS.

Fixed Fee & Reimbursables

a. Provided that the Contractor shall strictly perform all of its obligations under the Agreement, and subject only to additions and deductions by Changed Service Authorization as set forth in Article 6, the Owner shall pay to Contractor for its Services as set forth in Article 2, a Fixed Fee in the amount of $_____for services including labor and materials plus all Reimbursable Expenses as defined below.

b. The Contractor shall submit invoices for payment once the work has been completed and approved by the responsible CROA Representative.

c. Reimbursable Expenses shall include only the following actual and necessary costs and expenses reasonably and properly incurred by Contractor in connection with the Services rendered under this Agreement:

d. Contractor shall be compensated for any Services beyond those set forth in Article 2, in such an amount as the parties shall mutually agree in advance, such amount to be added to the Fixed Fee and invoiced and paid in accordance with the terms of Paragraphs b and c above; provided, however, that Contractor shall not be entitled to compensation for such Services unless Contractor has obtained prior written authorization of Owner to perform the same in accordance with the provisions of Article 6 of this Agreement.

e. The owner retains the right to reduce any portion of Contractor's Scope of Services as set forth in Article 2, or in any Changed Service Authorization, in accordance with the provisions of Article 6 of this Agreement. In such event Owner shall be entitled to a proportionate reduction to the Fixed Fee.

g. All invoices should reference the contract number and be returned to the following address:

CROA
P.O. Box 803555
Dallas TX, 75380_

4. REPRESENTATATIONS, WARRANTIES. AND COVENANTS. Contractor hereby represents to Owner that: (a) it has the experience and skill to perform the Services as set forth in this Agreement; (b) that it shall comply with all applicable federal, state, and local Jaws, rules, codes, and orders of any public, quasi-public or other government authority; (c) it is duly licensed to observe and perform the terms, covenants, conditions and other provisions on its part to be observed or performed under this Agreement; (d) it has by careful examination satisfied itself as to: (i) the nature, location and character of the general area in which the Services are to be performed including, without limitation, the surface conditions of the land and all structures and obstructions thereon, both natural and manmade, the surface water conditions of the general area and, to the extent pertinent, all other conditions; and (ii) all other matters or things which could in any manner affect the performance of the Services.

5. INSURANCE: INDEMNIFICATION.

a. Contractor shall, throughout the performance of its Services pursuant to this Agreement, maintain:

(i) Occurrence basis comprehensive general liability insurance (including broad form contractual coverage) and automobile liability insurance, with minimum limits of $1,000,000, respectively, combined single limit per occurrence, protecting it and Owner from claims for bodily injury (including death) and property damage which may arise from or in connection with the performance of Contractor's Services under this Agreement or from or out of any act or omission of Contractor, its officers, directors, agents, and employees; and

(ii) Workers' compensation insurance as required by applicable law (or employer's liability insurance with respect to any employee not covered by workers' compensation) with minimum limits of One Hundred Thousand Dollars ($100,000) per occurrence.

b. All such insurance required in Paragraph a. shall be in companies and on forms acceptable to Owner and shall provide that the coverage thereunder may not be reduced or canceled unless thirty(30) days prior written notice thereof is furnished to Owner. Certificates of insurance (and copies of all policies, if required by the Owner) shall be furnished to the Owner. In the event of any cancellation or reduction of coverage, the Contractor shall obtain substitute coverage as required under this Agreement, without any lapse of coverage to Owner whatsoever.

6. MOD1FICATIONS, ADDJTIONS, OR DELETIONS TO THE SERVICES.

a. A Changed Service Authorization shall be in writing by the Owner, in the form and manner attached to this Agreement as Exhibit C, which shall consist of additions, deletions, or other modifications to the Agreement.

b. The Owner may, from time to time, without affecting the validity of the Agreement, or any term or condition thereof, issue Changed Service Authorizations which may identify additional or revised Scope of Services, or other written instructions and orders, which shall be governed by the provisions of the agreement. The Contractor shall comply with all such orders and instructions issued by the Owner. Upon receipt of any such Changed Service Authorization, the Contractor shall promptly proceed with the Changed Service Authorization, and the resultant decrease or increase in the amount to be paid the Contractor, if any, shall be governed by the provisions of Article 3 in this Agreement.

7. PROTECTION OF PERSONS AND PROPERTY.

a. The Contractor shall be responsible for initiating, maintaining and supervising safety precautions and programs in connection with the Services, and shall provide all protection to prevent injury to all persons involved in any way in the Services and all other persons, including, without limitation, the employees, agents, guests, visitors, invitees, and licensees of the Owner who may visit or be affected thereby.

b. All Services, whether performed by the Contractor, its Subcontractors, or anyone directly or indirectly employed by any of them, and all applicable equipment, machinery, materials, tools and like items used in the Services, shall be in compliance with, and conform to: (a) all applicable laws, ordinances, rules, regulations and orders of any public, quasi-public or other governmental authority; and (b) all codes, rules, regulations and requirements of the Owner and its insurance carriers relating thereto. In the event of conflicting requirements, the more stringent shall govern.

c. The Contractor shall at all times keep the general area in which the Services are to **be** performed clean and free from accumulation of waste materials or rubbish (including, without limitation, hazardous waste), caused by performance of the Services, and shall continuously throughout performance of the Services remove and dispose of all such materials. The Owner may require the Contractor to comply with such standards, means and methods of cleanup, removal or disposal as the Owner may make known to the Contractor. In the event the Contractor fails to keep the general area in which the Services are to be performed clean and free from such waste or rubbish, or to comply with such standards, means and methods, the Owner may take such action and offset.

any and all costs or expenses of whatever nature paid or incurred by the Owner in undertaking such action against any sums then or thereafter due to the Contractor.

8. BOOKS AND RECORDS. Contractor shall maintain comprehensive books and records relating to any Services performed under this Agreement, which shall be retained by Contractor for a period of at least four (4) years from and after the completion of such Services. The owner, or its authorized representatives, shall have the right to audit such books and records at all reasonable times upon prior notice to the Contractor. The provisions of this paragraph shall survive the expiration or early termination of this Agreement.

9. ASSIGNMENT. This Agreement is for the personal services of Contractor and may not be assigned by Contractor in any fashion, whether by operation of law, or by conveyance of any type including, without limitation, transfer of stock in Contractor, without the prior written consent of Owner, which consent Owner may withhold in its sole discretion. Owner retains the right to assign all or any portion of this Agreement at any time. Upon such assignment, and provided the Assignee shall, in writing, assume Owner's obligations under this Agreement, Owner shall be automatically released and discharged from any and all of its obligations under this Agreement. and Contractor shall thenceforth look solely to the Assignee for performance of Owner's obligations under this Agreement.

10. SUSPENSION OR TERMINATION. Anything in this Agreement, to the contrary notwithstanding, Owner shall, in its sole discretion and with or without cause, have the right to suspend or terminate this Agreement upon seven (7) days prior written notice to Contractor. ln the event of termination, Owner's sole obligation and liability to Contractor, if any, shall be to pay to Contractor that portion of the fee earned by it, plus any earned amounts for extra Services performed pursuant to Articles 3 and 6, through the date of termination, plus any Reimbursable Expenses incurred (to the extent these are expressly allowed under Article 3).

11. SUBCONTRACTORS. If the Contractor desires to employ Subcontractors in connection with the performance of its Services under this Agreement:

a. Nothing contained in the Agreement shall create any contractual relationship between the Owner and any Subcontractor. However, it is acknowledged that the Owner is an intended third-party beneficiary of the obligations of the Subcontractors related to the Services.

b. Contractor shall coordinate the services of any Subcontractors and remain fully responsible under the terms of this Agreement; Contractor shall be and remain responsible for the quality, timeliness and the coordination of all Services furnished by the Contractor or its Subcontractors.

c. All subcontracts shall be writing. Each subcontract shall contain a reference to this Agreement and shall incorporate the terms and conditions of this Agreement to the full extent applicable to the portion of the Services covered thereby. Each Subcontractor must agree, for the benefit of the Owner, to be bound by such terms and conditions to the full extent applicable to its portion of the Services.

12. NOTICE.

a. Notices required or permitted to be given under this Agreement shall be in writing, may be delivered personally or by mail, telex, e-mail, cable, or courier service, and shall be deemed given when received by the addressee. Notices shall be addressed as follows:

If to Owner: CROA
851Celebration Avenue
Celebration, FL 34747

If to Contractor: Company Name
Company Address
Company Email

or to such other address as either party may direct by notice given to the other as hereinabove provided.

b. Notwithstanding the foregoing, any notice sent to the last designated address of the party to whom a notice may be or is required to be delivered under this Agreement shall not be deemed ineffective if actual delivery cannot be made due to a change of address of the party to whom the notice is directed or the failure or refusal of such party to accept delivery of the notice.

13. **LEGAL PROCEEDJNGS.**

a. The Agreement shall be construed and interpreted in accordance with the laws of the State of Florida and shall constitute the entire and sole understanding of the parties hereto notwithstanding any prior or written statements, instructions, agreements, representations, or other communications.

b. Any legal proceeding of any nature brought by either party against the other to enforce any right or obligation under this Agreement, or arising out of any matter pertaining to this Agreement or the Services to be performed hereunder, shall be submitted for trial, without jury, before the Circuit Court of the Ninth Judicial Circuit in and for Orange/Osceola County, Florida; or, if the Circuit Court does not have jurisdiction, then before the United States District Court for the Middle District of Florida (Orlando Division); or if neither of such courts shall have jurisdiction, then before any other court sitting in Osceola County, Florida, having subject matter jurisdiction. The parties consent and submit to the jurisdiction of any such court and agree to accept service of process outside the State of Florida in any matter to be submitted to any such court pursuant hereto, and expressly waive all rights to trial by jury regarding any such matter.

c. In the event that any provision of the Agreement is judicially construed to be invalid by a court of competent jurisdiction, such provision shall then be construed in a manner allowing its validity or, if this leads to an impracticable result, shall be stricken but, in either event, all other provisions of the Agreement shall remain in full force and in effect.

14. MISCELLANEOUS PROVISIONS.

a. Any failure by Owner to require strict compliance with any provision of this Agreement shall not be construed as a waiver of such provision, and Owner may subsequently require strict compliance at any time, notwithstanding any prior failure to do so.

b. The acceptance of final payment under this Agreement, or the acceptance of final payment upon early termination hereof, shall constitute a full and complete release of Owner by Contractor from any and all claims, demands and causes of action whatsoever which Contractor may have against Owner in any way related to the subject matter of this Agreement and Contractor shall as a condition precedent to receipt of final payment from Owner, submit to the Owner a fully and properly executed General Release, in the form attached to this Agreement. Neither the Owner's review, approval or acceptance of, nor payment for, any of the Services required under this Agreement shall be construed to operate as a waiver of any rights under this Agreement or of any cause of action arising out of the performance of this Agreement, and Contractor shall be and remain liable to Owner in accordance with law for all damages to Owner caused by the Contractor's performance of any of the Services furnished pursuant to this Agreement.

c. It is understood and agreed that Contractor is acting as an independent contractor in the performance of its Services hereunder, and nothing contained in this Agreement shall be deemed to create an agency relationship between Owner and Contractor

d. The rights and remedies of Owner provided for under this Agreement are cumulative and are in addition to any other rights and remedies provided by law.

IN WITNESS WHEREOF, the parties have caused this Agreement to be duly executed effective as of the day and year first above written.

OWNER	CONTRACTOR
Authorized Signature:_____	Authorized Signature: _____
Print Name: _____	Print Name: _____
Title: _____	Title: _____
Date: _____	Date: _____

March 21, 2024

CROA
Grand Manors
Attn: Rose Vazquez
851 Celebration Ave
Celebration, FL 34747
(407) 566-1200 x2232
Rose.vazquez@grandmanors.com

Bid Proposal

Thank you for the opportunity to bid the spring pressure washing for the service areas. We are pleased to submit our proposal for review. Attached you find our workflow process, standardized cleaning procedures, as well as our pricing. We take extreme caution and provide the highest level of service and quality possible.

A. PRESSURE CLEANING:

Fences

1. Solution and application method varies with degree of contamination as follows:
    a. Light to moderate contamination: Increase solution strength to one-part commercial strength chlorine.
    b. Heavy contamination: Apply second application.
2. Following are the steps to be used in pressure cleaning.
    a. Dampen surface with water and saturate with Simple Green Degreaser, allowing it to sit on surface for seven to ten minutes to loosen any dirt and oils.
    b. We will use approximately 2,500 PSI to pressure clean and remove all mildew, chalking, and loose material.
3. Every precaution will be utilized to protect surrounding vegetation which will be rinsed down with fresh water prior to start of pressure cleaning and again after procedure.

Flat Concrete

1. Solution and application method varies with degree of contamination as follows:
    a. Light to moderate contamination: Increase solution strength to one-part commercial strength chlorine.
    b. Heavy contamination: Apply second application.
2. Following are the steps to be used in pressure cleaning.
    a. Dampen surface with water and saturate with Simple Green Degreaser, allowing it to sit on surface for seven to ten minutes to loosen any dirt and oils.
    b. We will use approximately 4,000 PSI to pressure clean and remove all mildew, chalking, and loose material.
3. Every precaution will be utilized to protect surrounding vegetation which will be rinsed down with fresh water prior to start of pressure cleaning and again after procedure.

B. NOTES:

1. Please advise us of any of your specifications that you find are contradictory to the scope of work that we have provided. We will make necessary changes.
2. We will need bring a mobile pressure washing trailer and will tow away at end of day.
3. We will need any landscaping trimmed back for accessibility before pressure washing preparations begins.
4. We will need cooperation in removal of any cars from around buildings, prior to commencement of work.
5. We will begin work for this project at 8:00 a.m. Monday through Friday.
6. Music will not be allowed on the job site.
7. The foreman remains at the job site until the project is completed.

CARDINAL PAINTING
& PRESSURE WASHING

BID PROPOSAL

Celebration Residential Owners Association
Do: Grand Manors
Attn: Rose Vazuqez
851 Celebration Ave
Celebration, FL 34747
(407) 566-1200 x2232
Rose.vazquez@grandmanors.com

Date: March 21, 2024
Project: Spring Pressure Washing

We are pleased to submit our contract for the following:

PRICE:

Contract Price: Spring Partial Pressure Washing $17,455.00

***Invoice will be submitted for payment upon completion of each service area.**

Service Area	Cleaning Price
Blue Sage	$600.00
Savannah Square	$935.00
Charleston Place	$1,885.00
South Village	$1,950.00
Parkview	$2,585.00
Oak Pond	$300.00
Golden Aster	$150.00
East Village	$300.00
Spring Lake	$5,450.00
Island Village	$3,300.00
Total	**$17,455.00**

All material is to be as specified. All work is to be completed in a workmanlike manner according to standard practices. Any alteration or deviation from the enclosed specifications involving extra cost will be executed only upon written change orders and will become an extra charge over and above the estimate. Owners will be responsibility for any equipment cost associated with work delays due to approval of colors, samples, mockups, etc... After payment terms have been negotiated, payment schedule will follow and become part of this contract. We shall not be liable for delays resulting from strikes or other labor troubles, direct or indirect acts of government, fires, floods, hurricanes, accidents or any other cause beyond our control. We are not responsible for damage to lanai screens due to following our scope of work, or for overspray on vehicles that were not moved after our notice was posted advising vehicle owners to do so. Owner to carry fire, tornado and other necessary insurance. We carry General Liability, and our employees are fully covered by Workman's Compensation. Any claims for construction defects are subject to the notice and cure provision of Chapter 558, Florida Statutes.
This proposal and contract are valid for 60 days.

REQUEST FOR PROPOSAL FOR SPRING PRESSURE WASHING PROJECT FOR SERVICE AREA TOWNHOMES

RFP # 2024SPRINGPW

Celebration Residential Owners Association

Issued by:

CELEBRATION RESIDENTIAL OWNERS' ASSOCIATION, INC. (CROA) BOARD OF DIRECTORS

851 CELEBRATION AVE
CELEBRATION, FLORIDA 34747
CELEBRATION, FL

ROSE VAZQUEZ, SERVICE AREA MANAGER

407-566-1200

Date Issued: MARCH 8th, 2024.
Date/Time: APRIL 11th, 2024. 5:00 P.M.

TABLE OF CONTENTS

- GENERAL INFORMATION
  - MAP
  - PICTURES
  - PROJECT DESCRIPTION
  - GENERAL TERMS & CONDITIONS
- SCOPE OF WORK/SPECIFICATIONS
- PROPOSAL SUBMITTAL REQUIREMENTS
- PROPOSAL FORMS
  - BID RESPONSE FORM
  - DISCLOSURE OF SUBCONTRACTORS
  - EXPERIENCE
- SAMPLE SERVICES AGREEMENT

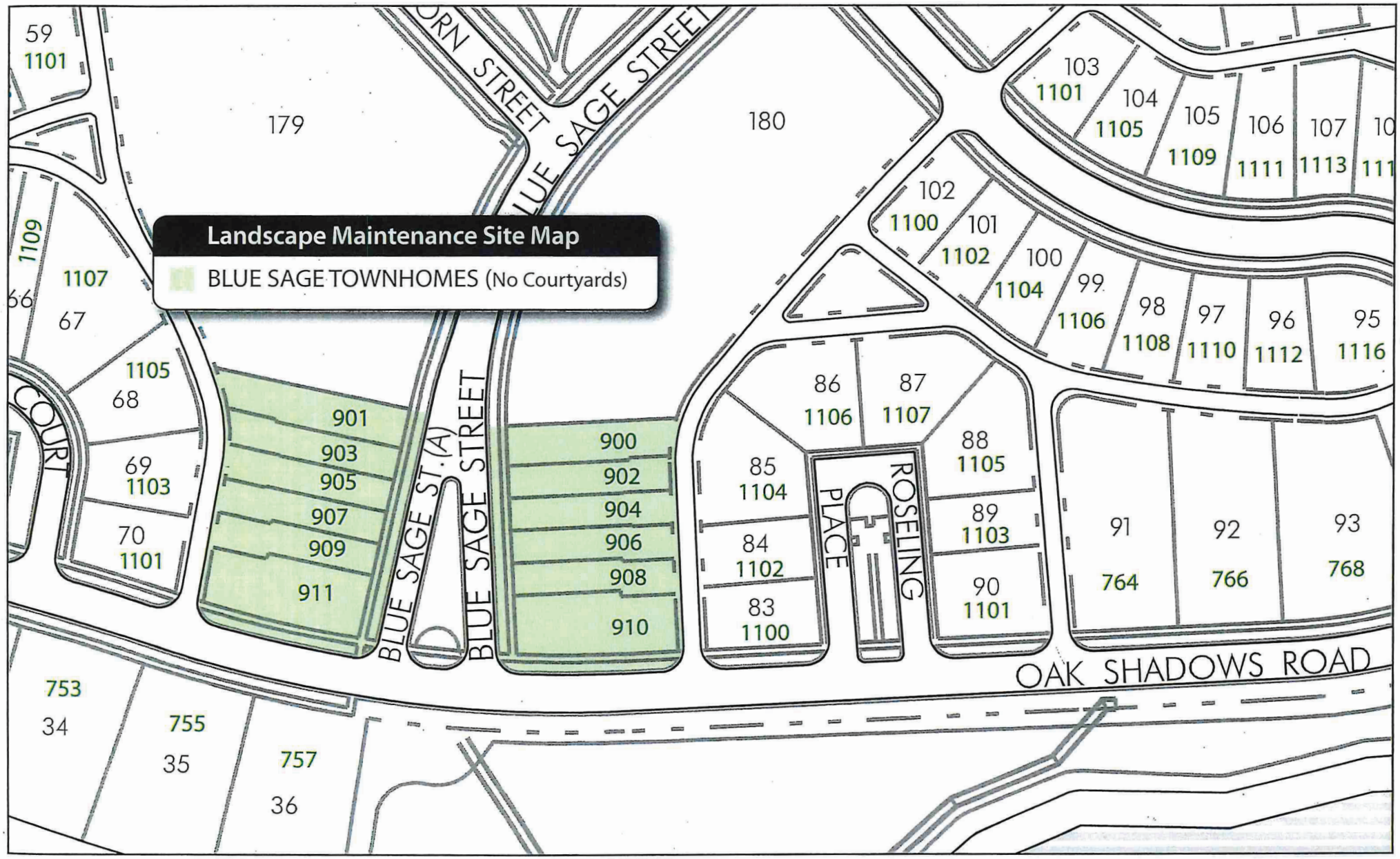

© 2017 Celebration Joint Committee, Inc.

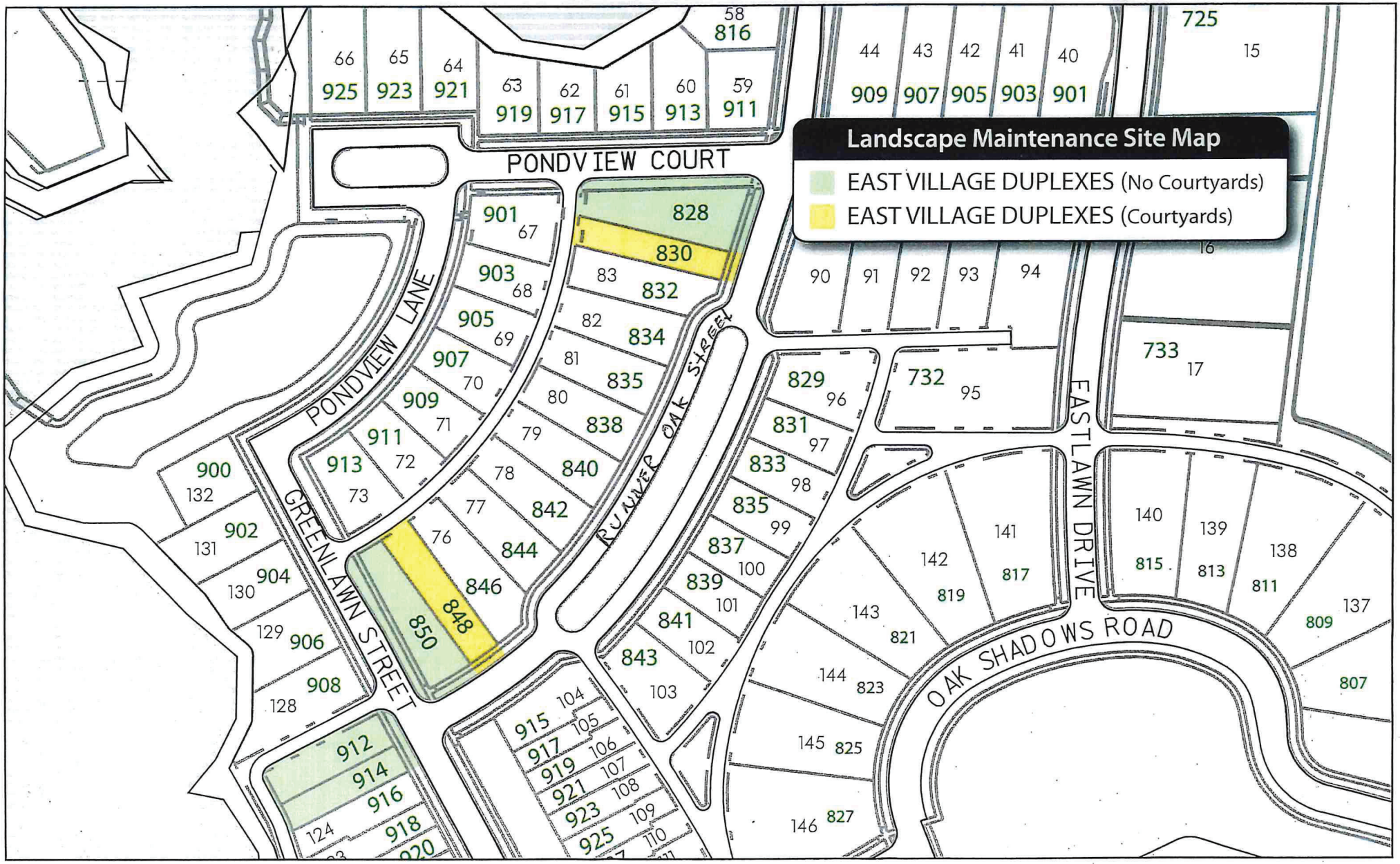

© 2017 Celebration Joint Committee, Inc.

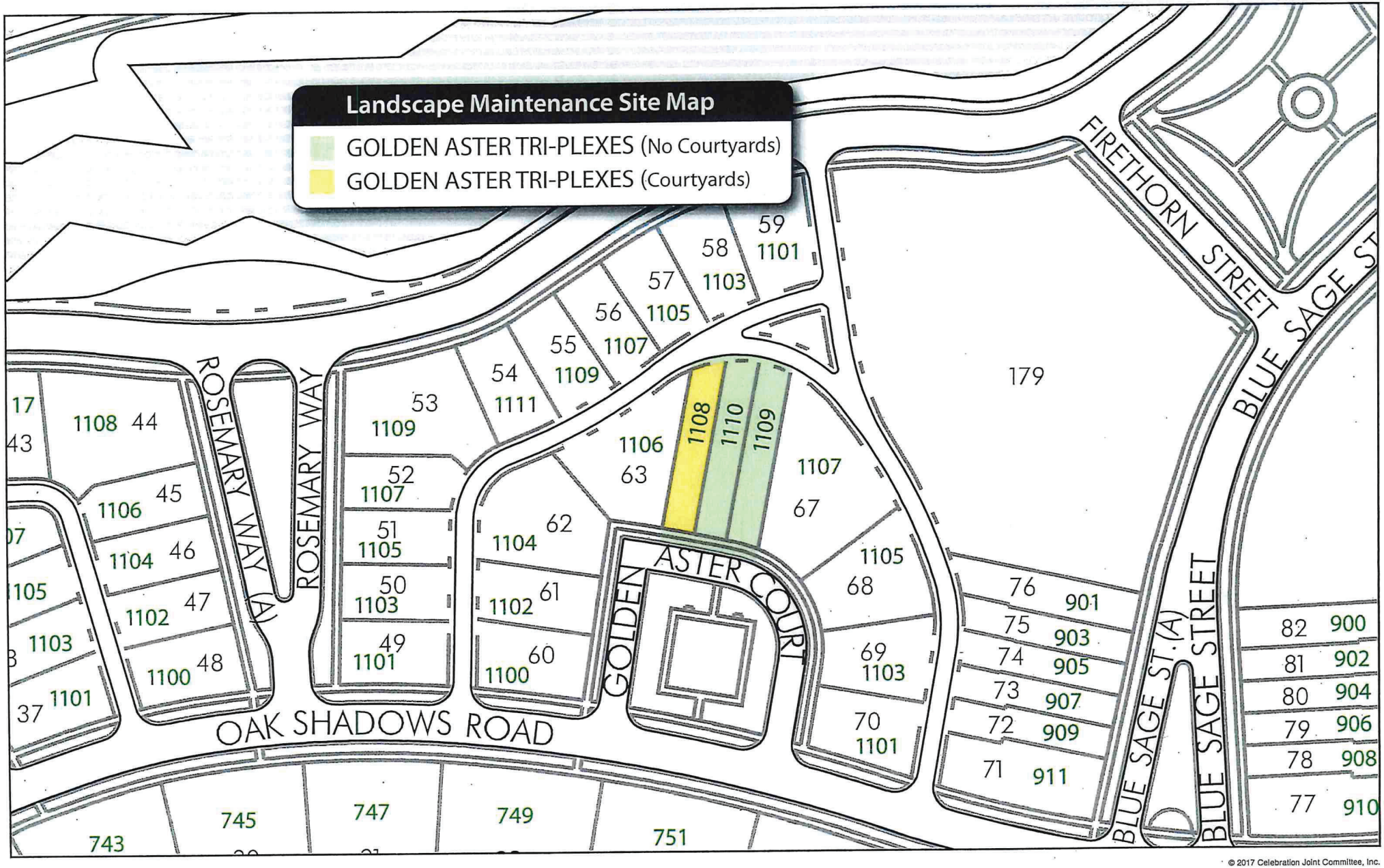

© 2017 Celebration Joint Committee, Inc.

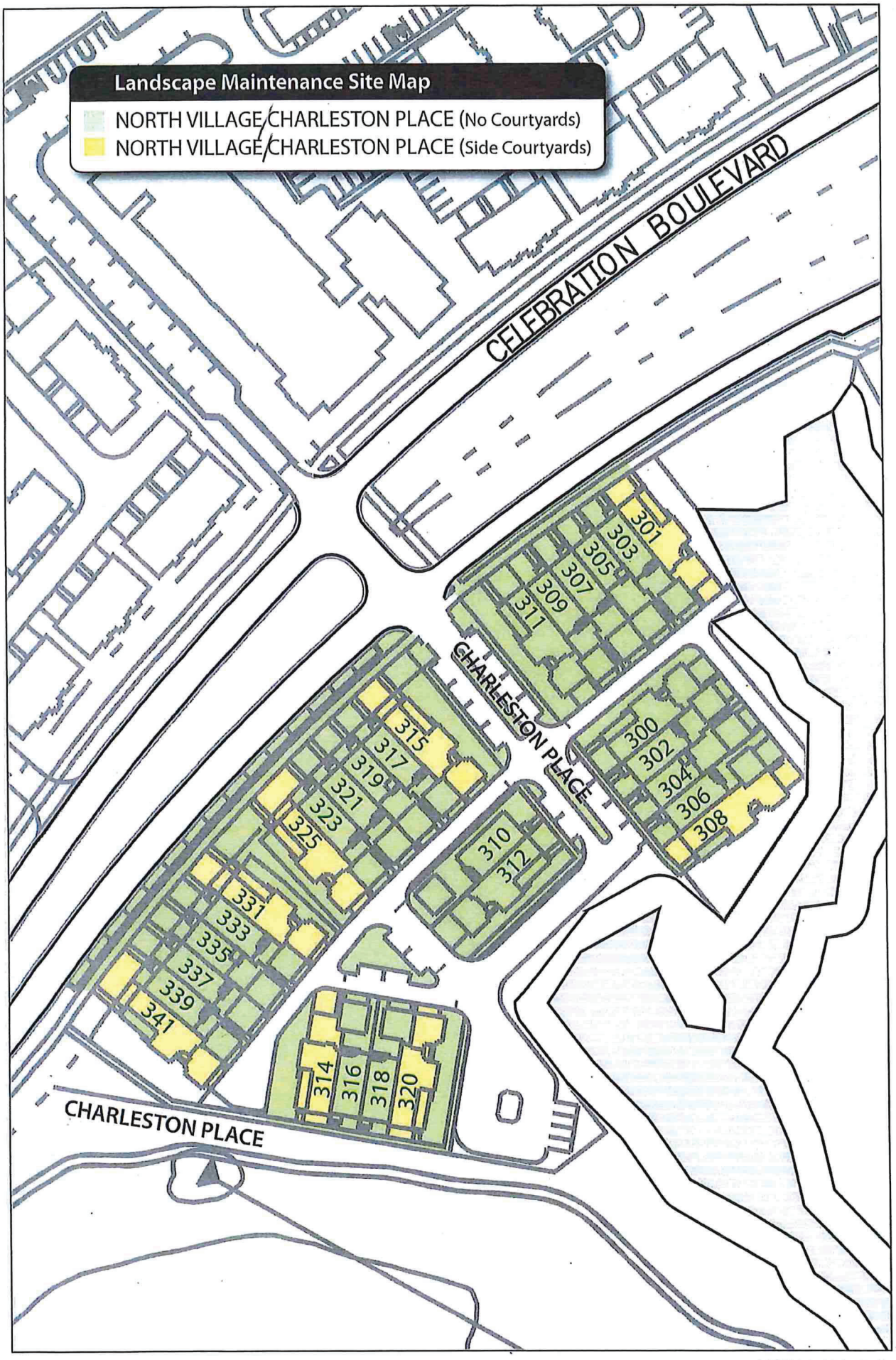

© 2017 Celebration Joint Committee, Inc.

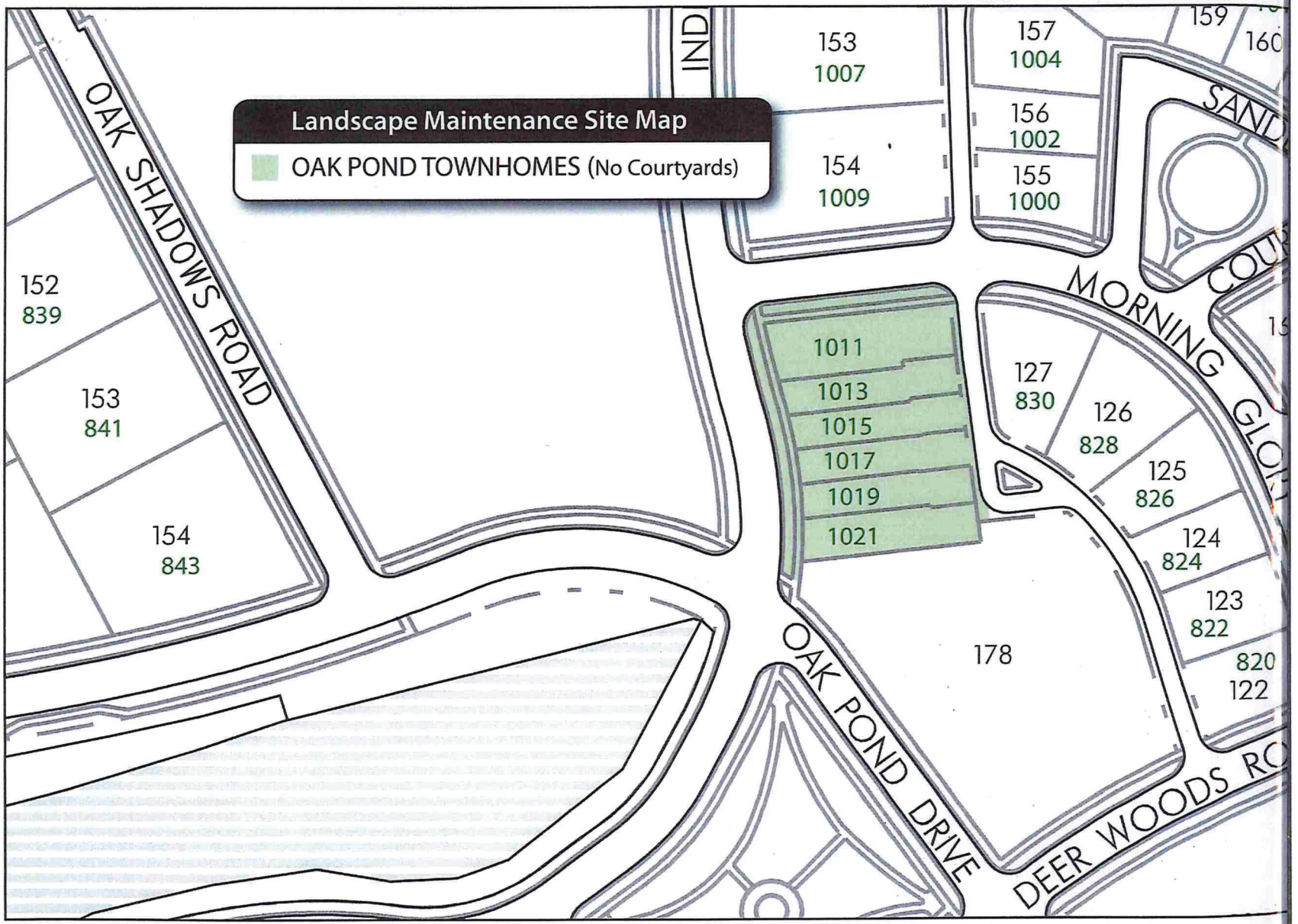
Landscape Maintenance Site Map
OAK POND TOWNHOMES (No Courtyards)
OAK SHADOWS ROAD
IND
153
1007
154
1009
157
1004
156
1002
155
1000
159
160
SAND
COU
MORNING GLO
152
839
153
841
154
843
1011
1013
1015
1017
1019
1021
127
830
126
828
125
826
124
824
123
822
820
122
178
OAK POND DRIVE
DEER WOODS RO

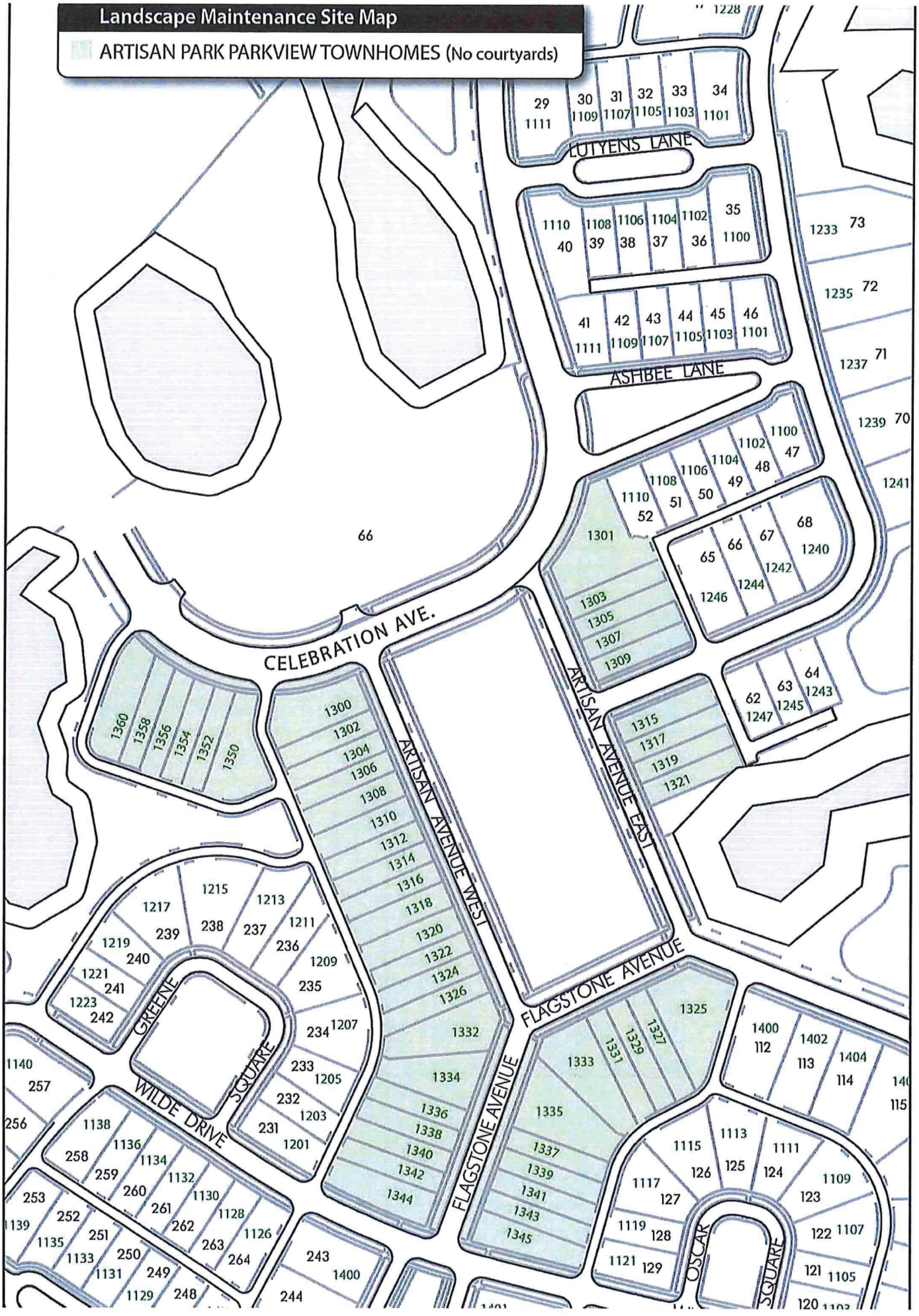
Landscape Maintenance Site Map
ARTISAN PARK PARKVIEW TOWNHOMES (No courtyards)
LUTYENS LANE
ASHBEE LANE
CELEBRATION AVE.
ARTISAN AVENUE WEST
ARTISAN AVENUE EAST
FLAGSTONE AVENUE
FLAGSTONE AVENUE
GREENE SQUARE
WILDE DRIVE
OSCAR SQUARE
66
1228
29 1111
30 1109
31 1107
32 1105
33 1103
34 1101
1110 40
1108 39
1106 38
1104 37
1102 36
35 1100
41 1111
42 1109
43 1107
44 1105
45 1103
46 1101
1233 73
1235 72
1237 71
1239 70
1241
1100 47
1102 48
1104 49
1106 50
1108 51
1110 52
1301
1303
1305
1307
1309
65
66
67
68 1240
1242
1244
1246
62 1247
63 1245
64 1243
1315
1317
1319
1321
1325
1327
1329
1331
1333
1335
1337
1339
1341
1343
1345
1400 112
1402 113
1404 114
1113
1115 126
1111 125
1117 127
124
1109 123
1119 128
122 1107
1121 129
121 1105
120
1360
1358
1356
1354
1352
1350
1300
1302
1304
1306
1308
1310
1312
1314
1316
1318
1320
1322
1324
1326
1332
1334
1336
1338
1340
1342
1344
1215
1213
1217
238
237
1211
239
236
1219
240
1209
1221
241
235
1223
242
234 1207
233 1205
232 1203
231 1201
243 1400
244
1140
257
256
1138
1136
258
1134
259
1132
260
1130
261
1128
262
1126
263
264
253
252
139
251
1135
250
1133
249
1131
248
1129

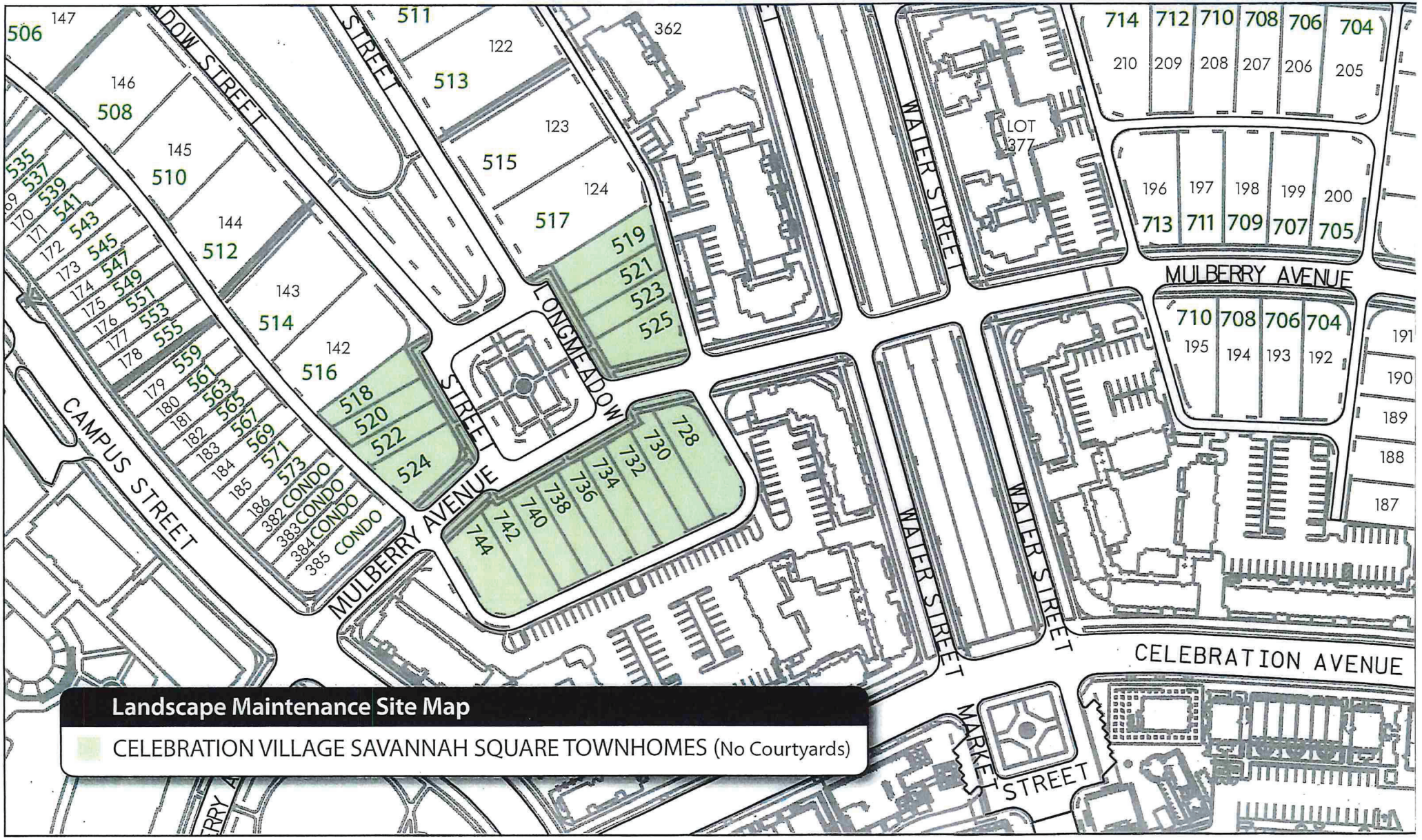

© 2017 Celebration Joint Committee, Inc

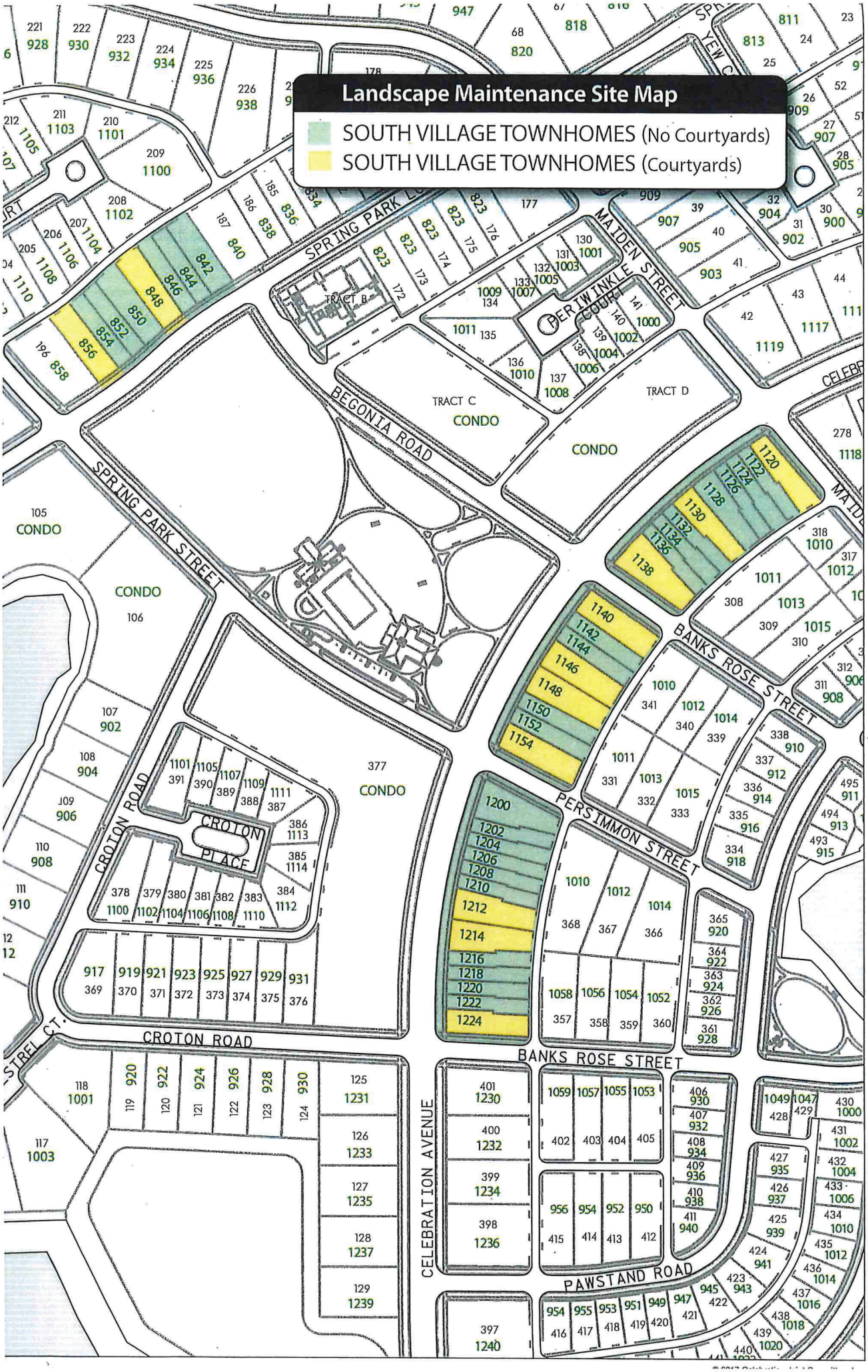
Landscape Maintenance Site Map
SOUTH VILLAGE TOWNHOMES (No Courtyards)
SOUTH VILLAGE TOWNHOMES (Courtyards)
SPRING PARK LANE
SPRING PARK STREET
MAIDEN STREET
PERIWINKLE COURT
BEGONIA ROAD
TRACT B
TRACT C
CONDO
TRACT D
CONDO
CONDO
CONDO
CROTON ROAD
CROTON PLACE
CROTON ROAD
PERSIMMON STREET
BANKS ROSE STREET
BANKS ROSE STREET
CELEBRATION AVENUE
PAWSTAND ROAD

- Town Homes
Spring Lake Gardens
SPRING LAKE
WEST SIDE
CELEBRATION BOULEVARD
EXISTING
WASHINGTON PALMS,
TYP
54 UA, TYP
RESOLUTE ST.
CASTILE ST.
CAP ROCK DR.
KIAWAH ST.
KIAWAH MEWS
ALLEE MEWS
PALMETTO MEWS
CAP ROCK MEWS
TWIN OAKS MEWS
SPRING LAKE
PARK
1379
1377
1375
1373
1371
1544
1542
1540
1538
1536
1532
1530
1528
1526
1524
1522
1520
1518
1516
1514
1508
1506
1504
1502
1500
1578
1576
1574
1572
1378
1376
1374
1372
1370
1586
1584
1582
1580
1598
1596
1594
1592
1608
1606
1604
1602
1616
1614
1612
1610
1630
1628
1626
1624
1618
1640
1638
1636
1641
1643
1645
1647
1649
1603
1601
1599
1597
1595
1593
1591
1589
1587
1577
1573
1571
1561
1563
1565
1567
1569
1545
1547
1549
1551
1553
1555
1557
1366
1364
1362
1360
1358
1356
1354
1352
1525
1523
1515
1513
1511
1509
1501
1600
1598
1596
1594
1592
1590
1355
1353
1351
1597
1595
1593
1599
1591
1346
1348
1350
1344
1342
1340
9 MG, TYP
38 UPA, TYP
8' TRAIL
EXISTING POND
NEW POND BANK
ALLEY LIGHT TYP. 2 L2.00
STREET LIGHT TYP. 3 L2.00
STREET LIGHT WITH SIGNAGE TYP. 4 L2.00
MATCHLINE - SEE SHEET L1.20
SCALE: 1" = 40'
0
40
800

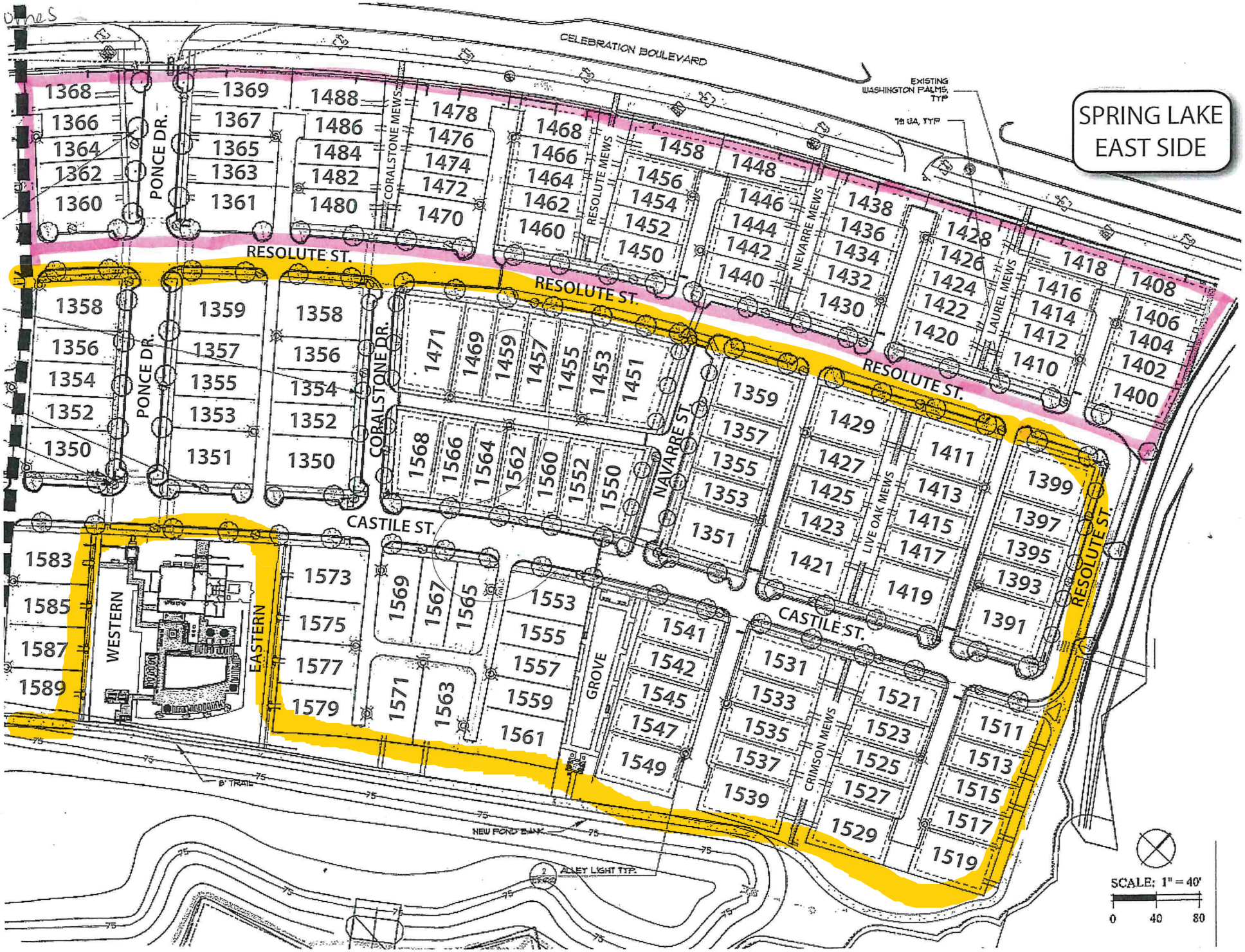
SPRING LAKE
EAST SIDE
CELEBRATION BOULEVARD
EXISTING WASHINGTON PALMS, TYP
PONCE DR.
CORALSTONE MEWS
RESOLUTE MEWS
NEVARRE MEWS
LAUREL MEWS
RESOLUTE ST.
CASTILE ST.
NAVARRE ST
LIVE OAK MEWS
CRIMSON MEWS
GROVE
WESTERN
EASTERN
8' TRAIL
NEW POND BANK
ALLEY LIGHT TYP.
SCALE: 1" = 40'
0
40
80

ISLAND VILLAGE AT CELEBRATION

May 2021. Artist's rendering only. Not meant to show exact community or landscaping details. Home site availbility subiect to change. ROC#249191B

Celebration Residential Owners Association, Inc. (CROA)

GENERAL TERMS & CONDITIONS

PROJECT DESCRIPTION

This request for proposal is for the Spring Pressure washing project in the Service Area Townhomes community of Celebration. The project consists of cleaning all – Sidewalks, curbs, walkways outside of gated back yards, driveways, front porch steps, PVC fencing outside surfaces only.

(CROA reserves the right to award contracts for any and all work which requires a separate bid based upon the nature of the work and its anticipated costs.)

FORMS & SPECIFICATIONS

Submitters are required to use the official "PROPOSAL FORMS", and all attachments itemized herein are to be submitted as a single document. Any variation from the minimum specifications must be clearly stated on the PROPOSAL FORMS.

HOW TO SUBMIT A PROPOSAL

One complete proposal form set (1 original) with all required documents as itemized and included herein are to be submitted in a sealed envelope, on the outside of which shall be prominently marked with the following identification: RFP # 2024 SPRINGPW with the name and address of the submitter. The RFP should be neat, professional in appearance and bound appropriately for the document's thickness. The original document shall have original signatures and clearly noted with *ORIGINAL* on the cover. All proposals must be hand delivered and/or mailed to CROA at 851 Celebration Ave, Celebration, FL 34747, by the date and time set forth herein. A copy must also be emailed to the CROA Representative at rose.vazquez@townhall.celebration.fl.us .

CONTRACTOR RESPONSIBILITY

Submitters are fully and completely responsible for the labeling, identification, and delivery of their proposals. CROA will not be responsible for any mislabeled or misdirected submissions, nor those handled by delivery persons, couriers, or the U. S. Postal Service.

- Submissions shipped by express delivery, or in overnight or courier envelopes, boxes, or packages must be prominently marked on the outside of such envelopes, boxes, or packages with the sealed proposal identification.

- Proposals that are incomplete, unbalanced, conditional, obscure, or which contain additions not called for, alterations, or irregularities of any kind, or which do not comply with these documents may be rejected at the option of CROA.

PROPOSAL DOCUMENTS REQUIRED

The following documents and forms in the following arrangement must accompany each proposal or alternate proposal submitted:

- Bid Response Form.
- Disclosure of Subcontractors, Sub-Consultants and Suppliers and Statement of Subcontractor experience.
- Proposer Certification/Addenda Acknowledgement Form.
- The General Terms and Conditions statement must be signed and returned with the proposal form.
- A sworn, notarized Statement of Contractor's Experience, Equipment and Personnel.
- W-9 and Certificate of Insurance for Contractor and all Subcontractors.
- Any and all applicable licenses or certifications must be included. This can also include any additional certifications or education of the organization or of staff who will be performing the actual work.

INSURANCE REQUIREMENTS

The successful Contractor upon Notice of Award will furnish a Certificate of Insurance. The Certificate(s) shall be completed by the Contractor's authorized agent and submitted to CROA, with CROA a named additional insured. The successful Contractor shall not commence any work in connection with the Agreement until it has obtained all of the following types of insurance and shall maintain such insurance as will protect him/her from claims which may arise out of or result from the vendor's operations under the terms and conditions of the RFP.

Contractor shall, throughout the performance of its Services pursuant to this Agreement, maintain:

a. Occurrence basis comprehensive general liability insurance (including broad form contractual coverage) and automobile liability insurance, with minimum limits of $1,000,000, respectively, combined single limit per occurrence, protecting it and Owner from claims for bodily injury (including death) and property damage which may arise from or in connection with the performance of Contractor's Services under this Agreement or from or out of any act or omission of Contractor, its officers, directors, agents, and employees; and

b. Workers' compensation insurance as required by applicable law (or employer's liability insurance with respect to any employee not covered by workers' compensation) with minimum limits of One Hundred Thousand Dollars ($100,000) per occurrence.

All such insurance required in Paragraph a. shall be in companies and on forms acceptable to Owner and shall provide that the coverage thereunder may not be reduced or canceled unless thirty (30) days prior written notice thereof is furnished to Owner. Certificates of insurance (and copies of all policies, if required by the Owner) shall be furnished to the Owner. In the event of any cancellation or reduction of coverage, the Contractor shall obtain substitute coverage as required under this Agreement, without any lapse of coverage to Owner whatsoever.

Contractor shall defend (if requested by Owner), indemnify, and hold Owner and its officers, directors, agents, employees and assigns harmless from and against any and all claims, demands, suits, judgments, losses, or expenses of any nature whatsoever (including attorneys' fees) arising directly or indirectly from or out of: any act or omission of Contractor, its officers, directors, agents or employees; any breach of Contractor's representations as set forth in this Agreement; or any other failure of Contractor to comply with the obligations on its part to be performed under this Agreement. The provisions of this paragraph shall survive the expiration or earlier termination of this Agreement.

CROA reserves the right to modify the insurance requirements set forth at any time during the process of solicitation or subsequent thereto.

EXAMINATION OF PROPOSAL DOCUMENTS

- Each Contractor shall carefully examine the Documents & Specifications and other applicable forms and inform himself/herself thoroughly regarding any and all conditions and requirements that may in any manner affect cost, progress, or performance of the work to be performed under the Contract. Ignorance on the part of the Contractor will in no way relieve him/her of the obligations and responsibilities assumed under the Contract.

- Should a Contractor find discrepancies or ambiguities in, or omissions from the Specifications, or should he/she be in doubt as to their meaning, he/she shall at once notify the Operations Manager, in writing.

INTERPRETATIONS, CLARIFICATIONS AND ADDENDA

In case any Proposer fails to acknowledge receipt of such addenda or addendum, his/her proposal will nevertheless be construed as though it had been received and acknowledged and the submission of his/her Proposal will constitute acknowledgment of the receipt of same. All addenda are a part of the Proposal Documents, and each Proposer will be bound by such addenda, whether or not received by him/her. It is the responsibility of each Proposer to verify that he/she has received all addenda issued before Proposals are opened.

In the case of unit price items, the quantities of work to be done and materials to be furnished under this Proposal/Contract are to be considered as approximate only and are to be used solely for the comparison of Proposals received. CROA does not expressly or by implication represent that the actual quantities involved will correspond exactly therewith; nor shall the Proposer plead misunderstanding or deception because of such estimate or quantities of work performed or material furnished in accordance with the Specifications and

other proposal documents, and it is understood that the quantities may be increased or diminished as provided herein without in any way invalidating any of the unit or lump sum prices proposal.

ALTERNATES

When certain items of equipment and/or materials are specified and/or described as the product of a particular manufacturer together with any required additional information such as model number, size, or catalog number, only such specific items may be used in preparing the Proposal, except as hereinafter provided.

CHANGES / MODIFICATIONS

CROA reserves the right to order changes in the scope of work and resulting contract. The successful Proposer has the right to request an equitable price adjustment in cases where modifications to the contract under the authority of this clause result in increased costs to the Contractor. Price adjustments will be based on the unit prices proposed by the Contractor in response to this solicitation. Any contract resulting from this solicitation may be modified upon written and mutual consent of both parties.

GOVERNING LAWS AND REGULATIONS

The Proposer is required to be familiar with and shall be responsible for complying with CROA Policies and Procedures, CROA rules, all federal, state, and local laws, ordinances, rules and professional standards or regulations that in any manner affect this solicitation, the selection process, protests, award of contract, contract management or any other activity associated with this solicitation and the subsequent work required of the successful Proposer.

CONTRACT NEGOTIATION

The Selection Committee shall rank all received proposals and provide the CROA Representative with the rankings and a recommended Contractor(s). If deemed prudent or necessary, the CROA Representative will be authorized to negotiate with the top ranked firm. The proposal signed by the successful Proposer along with documentation included in the proposal as required by this solicitation and other additional materials submitted by the Proposer and accepted by CROA shall be the basis for negotiation of a contract addressing the requirements of the solicitation. The resulting contract will be approved by CROA Board of Directors.

ADDITIONAL TERMS AND CONDITIONS

No additional terms and conditions included with the proposal response shall be evaluated or considered and any and all such additional terms and conditions shall have no force and effect and are inapplicable to this proposal. If submitted either purposefully through intent or design or inadvertently appearing separately in transmitting letters, specifications, literature, price lists or warranties, it is understood and agreed the general and special conditions in this solicitation are the only conditions applicable to this proposal and the Proposer's authorized signature affixed to the proposal attests to this.

Chris Noe	Owner		3/21/24
Agent Name	Title	Signature	Date

Celebration Service Areas Scope of Work: Exhibit A

Chosen vendor will complete all work in a professional manner according to the standard practices. The contract amount includes all chemicals, materials, and labor to complete the work. Any changes in the written contract will become an extra charge and will only be executed upon written and properly authorized orders.

Daily communication to the assigned CROA Representative must be given of what buildings and or units have been completed for inspection. Assigned CROA Representative will supply a list of units that are requesting the non-use of any chlorinated chemicals to their unit ahead of the start of the project. Any damage to units and or property will be held liable to the vendor. Before pictures of all areas must be taken and supplied to the CROA Representative to protect both the resident and vendor. The CROA Representative will document services by taking after-after photos of each inspected area within 24 hours of the communication from the vendor that the area has been completed.

All work must be completed within 35 days of the scheduled work to be started, giving an additional five business days due to the possible weather delays. Work must be completed satisfactorily by TBD unless otherwise approved by the CROA Representative.

Areas of Service – Sidewalks, curbs, walkways outside of gated back yards, driveways, front porch steps, PVC fencing outside surfaces only. **Building exterior cleaning is not included in this package.**

Payment Terms: Client will pay 100% of the contract amount upon satisfactory completion of services. Any other payments terms must be approved and amended to the contract prior to commencement of the work (see Addendum of Method of payment).

Service Area	**Cleaning Price**
Academy Row & MHG Townhomes	Not for bid, PW completed in 2024 Paint Project
Roseville Corner	Not for bid, PW completed in 2024 Paint Project
Greenlawn Townhomes	Not for bid, PW completed in 2024 Paint Project
Blue Sage	**$600.00**
Savannah Square	**$935.00**
Charleston Place	**$1,885.00**
South Village	**$1,950.00**
Parkview	**$2,585.00**
Oak Pond	**$300.00**
Golden Astor	**$150.00**
East Village	**$300.00**
Spring Lake Townhomes	**$5,450.00**
Island Village	**$3,300.00**
Total	**$17,455.00**
Payment Terms	Each Service Area will be individually invoiced- Due upon completion
Billing Information Submit all invoices to accountspayable@ciramail.com	Grand Manors (Celebration) 851 Celebration Avenue Celebration, FL 34747

_____ _____

Celebration Residential Owners Association Date

_____ _____

(Company selected goes here) Date

Celebration Residential Owners Association, Inc. (CROA)

DISCLOSURE OF SUBCONTRACTORS AND SUPPLIERS

Name of Firm Submitting Proposal:

Cardinal Painting
(Print or Type)

Name of Person Submitting Proposal:

Chris Noe
(Print or Type)

Name of Firm Submitting Proposal:

N/A
(Print or Type)

Name of Person Submitting Proposal:

N/A
(Print or Type)

Please list all Sub-contractors and Suppliers to be used in connection with performance of this contract. Attach additional sheets as necessary.

Name of Firm or Agency: Address: **N/A**	Telephone:
Contact Name:	Title:

This document must be completed and returned with your Submittal.

Name of Firm or Agency: Address:	Telephone:
Contact Name:	Title:

N/A

Name of Firm or Agency: Address:	Telephone:
Contact Name:	Title:

N/A

Name of Firm or Agency: Address:	Telephone:
Contact Name:	Title:

N/A

Name of Firm or Agency: Address:	Telephone:
Contact Name:	Title:

N/A

This document must be completed and returned with your Submittal.

Celebration Residential Owners Association, Inc. (CROA)

STATEMENT OF CONTRACTOR'S EXPERIENCE, EQUIPMENT AND PERSONNEL

(Contractor may also provide any supplemental company or personnel information that will assist CROA in evaluating your proposal such as a corporate organizational chart showing area of responsibility for personnel listed on this form).

CONTRACTOR: Cardinal Painting

DATE: _____

1. How many years has your organization been in business as a painting contractor under your present business name?

   2

2. List all previous business names of your organization:

   N/A

3. How many years' experiences in painting services?

   Prime Contractor: 6

   Subcontractor: 12

4. List all officers and directors of your organization:

Name	Position Held
Chris Noe	Owner/Sales
Meredith Noe	Owner/Project Coordinator
Alex Perry	Project Manager

5. Have you ever failed to complete any work awarded to you in the last 3 years? ____ Yes X No

   If yes, where, and why? N/A

EXPERIENCE

1. Describe any experience of the principal individuals (Foremen, Superintendents, etc.) who are responsible for the actual painting work of your organization?

Alex Perry	Project Manager	
Name	Position	
Manages portfolio of projects	7	1
Type of Work	Years' Experience	Years with Firm
Bryan Calderon	General Superintendent	
Name	Position	
Manages onsite teams	9	2
Type of Work	Years' Experience	Years with Firm
Chris Noe	Owner/Sales	
Name	Position	
Manages teams and generates sales	13	2
Type of Work	Years' Experience	Years with Firm
Meredith Noe	Owner/Project Coordinator	
Name	Position	
Coordinates materials and equipment	15	2
Type of Work	Years' Experience	Years with Firm

2. List/describe five (5) painting contracts/projects of similar size and scope that you currently have or have recently completed.

This document must be completed and returned with your Submittal.

Celebration Residential Owners Association (CROA)

Project: Spring Lake Townhomes Phase 1 & 2 Location: Celebration, FL

Date: 11/23/2022 Contract Amount: $205,109.00

Contract Name, Phone Number, Fax Number:

Spring Lake Townhomes Phase 1&2, Rose Vazquez (407) 566-1210 Ext. 2232

Project: Spring Lake Townhomes Phase 3 Location: Celebration, FL

Date: 03/01/2023 Contract Amount: $98,614.00

Contract Name, Phone Number, Fax Number:

Spring Lake Townhomes Phase 3, Rose Vazquez (407) 566-1210 Ext. 2232

Project: Siena Doors/Breezeway Location: Celebration, FL

Date: 05/01/2023 Contract Amount: $108,237.00

Contract Name, Phone Number, Fax Number:

Condo A,B,C Doors & Shutters, Lorraine Nemcek (586) 344-0918

Project: Legoland Ferrari Racers Location: Winter Haven, FL

Date: 03/11/2024 Contract Amount: $64,000.00

Contract Name, Phone Number, Fax Number:

Lego Ferrari Racers, Kevin Hazelwood (863) 845-6431

CONTRACTOR'S AFFIDAVIT

State of Florida
County of _____

Before me personally appeared_____who (title) is _____of *(the company described herein)*___being duly sworn, deposes and say that the foregoing statements are a true and accurate statement of the position of said organization as of the date thereof, and, that the statements and answers to the foregoing experience questionnaire are correct and true as of the date of this affidavit; and, that he/she understands that intentional inclusion of false, deceptive, or fraudulent statements of this application constitutes fraud; and, agrees to furnish any pertinent information requested by CROA deemed necessary to verify the statements made in this application or regarding the ability, standing and general reputation of the applicant.

Personally Known____or Produced Identification _____

Sworn to and subscribed before me this_____day of_____, 2024.

_____ _____

NOTARY PUBLIC – STATE of FLORIDA (Print Name of Notary Public)
(Signature of Notary Public)

CERTIFICATE OF LIABILITY INSURANCE

DATE (MM/DD/YYYY): 03/19/2024

THIS CERTIFICATE IS ISSUED AS A MATTER OF INFORMATION ONLY AND CONFERS NO RIGHTS UPON THE CERTIFICATE HOLDER. THIS CERTIFICATE DOES NOT AFFIRMATIVELY OR NEGATIVELY AMEND, EXTEND OR ALTER THE COVERAGE AFFORDED BY THE POLICIES BELOW. THIS CERTIFICATE OF INSURANCE DOES NOT CONSTITUTE A CONTRACT BETWEEN THE ISSUING INSURER(S), AUTHORIZED REPRESENTATIVE OR PRODUCER, AND THE CERTIFICATE HOLDER.

IMPORTANT: If the certificate holder is an ADDITIONAL INSURED, the policy(ies) must have ADDITIONAL INSURED provisions or be endorsed. If SUBROGATION IS WAIVED, subject to the terms and conditions of the policy, certain policies may require an endorsement. A statement on this certificate does not confer rights to the certificate holder in lieu of such endorsement(s).

PRODUCER BIBERK P.O. Box 113247 Stamford, CT 06911	CONTACT NAME: PHONE (A/C, No, Ext): 844-472-0967 FAX (A/C, No): 203-654-3613 E-MAIL ADDRESS: customerservice@biBERK.com
	INSURER(S) AFFORDING COVERAGE — NAIC #
	INSURER A : Berkshire Hathaway Direct Insurance Company — 10391
INSURED Cardinal Painting 4653 W Irlo Bronson Memorial Hwy Ste 101 Kissimmee, FL 34746-5349	INSURER B : INSURER C : INSURER D : INSURER E : INSURER F :

COVERAGES **CERTIFICATE NUMBER:** **REVISION NUMBER:**

THIS IS TO CERTIFY THAT THE POLICIES OF INSURANCE LISTED BELOW HAVE BEEN ISSUED TO THE INSURED NAMED ABOVE FOR THE POLICY PERIOD INDICATED. NOTWITHSTANDING ANY REQUIREMENT, TERM OR CONDITION OF ANY CONTRACT OR OTHER DOCUMENT WITH RESPECT TO WHICH THIS CERTIFICATE MAY BE ISSUED OR MAY PERTAIN, THE INSURANCE AFFORDED BY THE POLICIES DESCRIBED HEREIN IS SUBJECT TO ALL THE TERMS, EXCLUSIONS AND CONDITIONS OF SUCH POLICIES. LIMITS SHOWN MAY HAVE BEEN REDUCED BY PAID CLAIMS.

INSR LTR	TYPE OF INSURANCE	ADDL INSD	SUBR WVD	POLICY NUMBER	POLICY EFF (MM/DD/YYYY)	POLICY EXP (MM/DD/YYYY)	LIMITS	
A	X COMMERCIAL GENERAL LIABILITY CLAIMS-MADE X OCCUR GEN'L AGGREGATE LIMIT APPLIES PER: POLICY PRO-JECT LOC X OTHER:			N9BP313264	03/17/2024	03/17/2025	EACH OCCURRENCE DAMAGE TO RENTED PREMISES (Ea occurrence) MED EXP (Any one person) PERSONAL & ADV INJURY GENERAL AGGREGATE PRODUCTS - COMP/OP AGG OTHER	$ 1,000,000 $ 50,000 $ 5,000 $ Included $ 2,000,000 $ 2,000,000 $
	AUTOMOBILE LIABILITY ANY AUTO OWNED AUTOS ONLY HIRED AUTOS ONLY SCHEDULED AUTOS NON-OWNED AUTOS ONLY						COMBINED SINGLE LIMIT (Ea accident) BODILY INJURY (Per person) BODILY INJURY (Per accident) PROPERTY DAMAGE (Per accident) OTHER	$ $ $ $ $
	UMBRELLA LIAB OCCUR EXCESS LIAB CLAIMS-MADE DED RETENTION $						EACH OCCURRENCE AGGREGATE OTHER	$ $ $
	WORKERS COMPENSATION AND EMPLOYERS' LIABILITY ANY PROPRIETOR/PARTNER/EXECUTIVE OFFICER/MEMBER EXCLUDED? (Mandatory in NH) Y / N If yes, describe under DESCRIPTION OF OPERATIONS below	N / A					PER STATUTE OTH-ER E.L. EACH ACCIDENT E.L. DISEASE - EA EMPLOYEE E.L. DISEASE - POLICY LIMIT	 $ $ $
	Professional Liability (Errors & Omissions): Claims-Made						Per Occurrence/ Aggregate	

DESCRIPTION OF OPERATIONS / LOCATIONS / VEHICLES (ACORD 101, Additional Remarks Schedule, may be attached if more space is required)

CERTIFICATE HOLDER

CROA
851 Celebration Ave
Kissimmee, FL 34747

CANCELLATION

SHOULD ANY OF THE ABOVE DESCRIBED POLICIES BE CANCELLED BEFORE THE EXPIRATION DATE THEREOF, NOTICE WILL BE DELIVERED IN ACCORDANCE WITH THE POLICY PROVISIONS.

AUTHORIZED REPRESENTATIVE

© 1988-2015 ACORD CORPORATION. All rights reserved.

The ACORD name and logo are registered marks of ACORD

CERTIFICATE OF PROPERTY INSURANCE

DATE (MM/DD/YYYY): 03/19/2024

THIS CERTIFICATE IS ISSUED AS A MATTER OF INFORMATION ONLY AND CONFERS NO RIGHTS UPON THE CERTIFICATE HOLDER. THIS CERTIFICATE DOES NOT AFFIRMATIVELY OR NEGATIVELY AMEND, EXTEND OR ALTER THE COVERAGE AFFORDED BY THE POLICIES BELOW. THIS CERTIFICATE OF INSURANCE DOES NOT CONSTITUTE A CONTRACT BETWEEN THE ISSUING INSURER(S), AUTHORIZED REPRESENTATIVE OR PRODUCER, AND THE CERTIFICATE HOLDER.

PRODUCER

BIBERK
P.O. Box 113247
Stamford, CT 06911

CONTACT NAME:
PHONE (A/C, No, Ext): (844) 472-0967 | FAX (A/C, No): (203) 654-3613
E-MAIL ADDRESS: salessupport@biberk.com
PRODUCER CUSTOMER ID:

INSURER(S) AFFORDING COVERAGE	NAIC #
INSURER A : Berkshire Hathaway Direct Insurance Compai	237310
INSURER B :	
INSURER C :	
INSURER D :	
INSURER E :	
INSURER F :	

INSURED

Cardinal Painting
4653 W Irlo Bronson Memorial Hwy Ste 101
Kissimmee, FL 34746-5349

COVERAGES **CERTIFICATE NUMBER:** **REVISION NUMBER:**

LOCATION OF PREMISES / DESCRIPTION OF PROPERTY (Attach ACORD 101, Additional Remarks Schedule, if more space is required)

Location: 4653 W Irlo Bronson Memorial Hwy Ste 101Kissimmee, FL 34746-5349
Bldg #001: Pressure Washing/Exterior Cleaning - 7622103

THIS IS TO CERTIFY THAT THE POLICIES OF INSURANCE LISTED BELOW HAVE BEEN ISSUED TO THE INSURED NAMED ABOVE FOR THE POLICY PERIOD INDICATED. NOTWITHSTANDING ANY REQUIREMENT, TERM OR CONDITION OF ANY CONTRACT OR OTHER DOCUMENT WITH RESPECT TO WHICH THIS CERTIFICATE MAY BE ISSUED OR MAY PERTAIN, THE INSURANCE AFFORDED BY THE POLICIES DESCRIBED HEREIN IS SUBJECT TO ALL THE TERMS, EXCLUSIONS AND CONDITIONS OF SUCH POLICIES. LIMITS SHOWN MAY HAVE BEEN REDUCED BY PAID CLAIMS.

INSR LTR	TYPE OF INSURANCE	POLICY NUMBER	POLICY EFFECTIVE DATE (MM/DD/YYYY)	POLICY EXPIRATION DATE (MM/DD/YYYY)	COVERED PROPERTY	LIMITS
	X PROPERTY	N9BP313264	03/17/2024	03/17/2025	BUILDING	$ 0
	CAUSES OF LOSS / DEDUCTIBLES				PERSONAL PROPERTY	$ 0
	BASIC — BUILDING 250				BUSINESS INCOME	$ *
	BROAD — CONTENTS				EXTRA EXPENSE	$ *
	X SPECIAL				RENTAL VALUE	$
	EARTHQUAKE				BLANKET BUILDING	$ n/a
	WIND				BLANKET PERS PROP	$ n/a
	FLOOD				BLANKET BLDG & PP	$ n/a
						$
						$
	INLAND MARINE	TYPE OF POLICY				$
	CAUSES OF LOSS					$
	NAMED PERILS	POLICY NUMBER				$
						$
	CRIME					$
	TYPE OF POLICY					$
						$
	BOILER & MACHINERY / EQUIPMENT BREAKDOWN					$
						$
						$
						$

SPECIAL CONDITIONS / OTHER COVERAGES (ACORD 101, Additional Remarks Schedule, may be attached if more space is required)

* ALS up to 12 months.

CERTIFICATE HOLDER

CROA
851 Celebration Ave
Kissimmee, FL 34747

CANCELLATION

SHOULD ANY OF THE ABOVE DESCRIBED POLICIES BE CANCELLED BEFORE THE EXPIRATION DATE THEREOF, NOTICE WILL BE DELIVERED IN ACCORDANCE WITH THE POLICY PROVISIONS.

AUTHORIZED REPRESENTATIVE

© 1995-2015 ACORD CORPORATION. All rights reserved.

The ACORD name and logo are registered marks of ACORD

Discussion Item A

Spring Park Playground CROA Charter 3.17 (u)
Presentation

Discussion Item B

ARC Processes and Procedures

Discussion Item C

Committee Charters and Master Resolutions

I. Master Resolution
II. ARC
III. Communications
IV. Covenants
V. Dog Park
VI. Finance
VII. Lifestyles/Special Events
VIII. Technology

Discussion Item D

Contract Negotiations

Discussion Item E

Future Development of the Civic Corridor

Discussion Item F

Review existing amenities

Discussion Item G

Access to Association Records

POLICY RESOLUTION – ACCESS TO ASSOCIATION RECORDS
OF
CELEBRATION RESIDENTIAL OWNERS ASSOCIATION, INC.

~~2011~~2024-0~~3~~

WHEREAS, Article III, Section 3.17 of those certain Restated Second Amended and Restated By-laws of Celebration Residential Owner's Association, Inc. (the "CROA By-Laws") attached to the Declaration of Covenants, Conditions and Restrictions for Celebration Residential Properties, recorded in Official Records Book 1298, Page 1889 of the Public Records of Osceola County, Florida, as further amended and supplemented (the "CROA Declaration") grants the Board of Directors of the Celebration Residential Owner's Association, Inc. (the "CROA Board") all of the powers and duties necessary for the administration of the affairs of the Celebration Residential Owner's Association, Inc. ("CROA"); and

WHERAS, the Association maintains the official records of the corporation in accordance with Chapter 720.303(4), Florida Statutes; and

WHEREAS, Section 6.4(a) of the CROA By-laws provides that: "The Board shall make available for inspection and copying by any holder, insurer, or guarantor of a first Mortgage on a Unit, any Member, or the duly appointed representative of any of the foregoing at any reasonable time and for a purpose reasonably related to his or her interest in a Unit"; and

WHEREAS, Section 6.4(b) of the CROA By-laws provides that: "The Board shall establish rules with respect to: (i) notice to be given to the custodian of the records; (ii) hours and days of the week when such an inspection may be made; (iii) payment of the cost of reproducing copies of documents requested";

NOW THEREFORE BE IT RESOLVED that the following requirements are hereby established for the inspection of the records of the Association:

1. A notice of intent to inspect must be submitted in writing. It shall be addressed to The Board of Directors and delivered to 851 Celebration Avenue, Celebration, Florida, 34747 or emailed to townhall@ciramail.com.
2. The notice must specify with some particularity, which records are to be inspected, so that such records may be recovered in an orderly manner and assembled for inspection.
3. All records shall be inspected either at the registered office of the Association, located at 851 Celebration Avenue, Celebration, FL 34747 between the hours of 9:00 a.m. and 5:00 p.m., Tuesday through Friday (except holidays) or via electronic review via digital access link. The member or his/her designee may inspect official records a maximum of one 8-hour business day per month.
4. The association will maintain the Official Records as required in §720.303(4), Florida Statutes. These include, but are not limited to:

    a) Copies of any plans, specifications, permits, and warranties related to improvements.
    b) A copy of the bylaws of the association and of each amendment to the bylaws.
    c) A copy of the articles of incorporation of the association and of each amendment thereto.
    d) A copy of the declaration of covenants and a copy of each amendment thereto.
    e) A copy of the current rules of the homeowners' association.
    f) The minutes of all meetings of the board of directors and of the members.
    g) A current roster of all members and their mailing addresses and parcel identifications.
    h) All of the associations' insurance policies or copy thereof.
    i) A current copy of all contracts to which the association is a party.
    j) The financial and accounting records of the association.

Formatted: Indent: Left: 0", First line: 0"

5. The member or his/her designated representative requesting access shall not disrupt the ordinary business activities of the registered office during the course of inspection and, during the inspection, shall be accompanied by a designated representative of the association.
6. No original records may be removed from the office without the express written consent of the Board of Directors.
7. In the event the person reviewing the records desires copies of specific records, such person may either (a) bring his/her own duplicating machine to the registered office or (b) pay the association in certified funds $.15 (fifteen cents) per copy or $5.00 (five dollars) per USB Drive and all costs involving personnel fees and charges at an hourly rate for the vendor or employee's time to cover the administrative costs to the vendor or the association.
8. The association is under no obligation to provide any additional information other than that which is required by law.

RESOLVED:

EFFECTIVE THIS DATE: _____, 2024~~13~~

BY: _____
President
Celebration Residential Owners' Association, Inc.

Discussion Item H

Tennis

Discussion Item I

Service Area Painting Projects

I. Roseville Corner

II. Greenlawn

Discussion Item J

Holiday Fest Inflatables

Holiday Fest Activities

Merry Minstrel dba Captain Carnival is our preferred vendor for the Holiday Fest event on Friday, December 6. We have partnered with this company for previous events and would like to continue working with them in the future. The December 6 date is filling quickly for this vendor, so we would like to proceed with reserving the following items:

Real Beard Santa & Décor Package

Winter Maze Interactive Game

Christmas House Playland

Alpine Tube Slide

Christmas Tree Bounce House

Captain Carnival
22625 Coronado Somerset Dr
Sorrento, FL 32776 US
407-687-6220
captaincarnivalflorida@yahoo.com
http://www.merryminstrel.net

Invoice 17892

BILL TO
4075661200
851 Celebration Ave.
Celebration Town Hall
Celebration, FL 34747

DATE	PLEASE PAY	DUE DATE
12/06/2024	**$5,625.00**	12/06/2024

ACTIVITY	QTY	RATE	AMOUNT
SLIDES:Alpine Tube Slide Staff and generator included	1	1,795.00	1,795.00
DECOR PACKAGE Santa throne and decor package including delivery	1	550.00	550.00
ENTERTAINMENT:Santa Claus 6-9	3	150.00	450.00
INTERACTIVE GAMES:Winter Maze Staff and generator included	1	1,795.00	1,795.00
INFLATABLES:Christmas tree	1	350.00	350.00
christmas house playland	1	350.00	350.00
GENERATOR Total of three needed	1	85.00	85.00
event staff 6-9 Total of 4 needed	2	125.00	250.00
DELIVERY Event location 631 Sycamore St, Celebration, FL 34747	1	0.00	0.00

SUBTOTAL	5,625.00
TAX	0.00
TOTAL	5,625.00
TOTAL DUE	$5,625.00

THANK YOU.

Discussion Item K

Christmas with the Celts Contract

RE: Celebration Joint Committee - Performer Worker's Compensation

You forwarded this message on Wed 4/3/2024 3:15 PM
You forwarded this message on Wed 4/3/2024 3:15 PM

KH

Kevin Halverson <KHalverson@Sihle.com>

To:

Liz Wargo;

Lauren Gunnyon

Cc:Suzanne Pacicca <SPacicca@Sihle.com>

Thu 3/28/2024 5:43 PM

PAS Northfield Insurance Certified Letter.pdf
9 MB

Good afternoon Liz and Lauren,

Happy Thursday!! I hope you are having a great week and you are doing well!

My sincere apologies for the delay in getting back to you. It has been a crazy couple of days of meetings and being on the road. Thank you for reaching out on this. It is always recommended that any vendors, contractors, performers, etc. have standard Workers Compensation insurance. With that said, if it is a small company or a company without Workers Compensation you will want to at the very least request an exemption or waiver regarding this coverage. Usually exemptions are used for companies with a limited number of employees (usually limited to owners only). It looks like there are quite a few performers for each show. It is interesting that they do not have Workers Compensation Coverage. Are all performers 1099 employees of the organization? If so, it would be highly unlikely that each 1099 employee has their own corporation and a valid Workers Compensation Exemption. In this case I would recommend contacting the Association attorney about a potential waiver for any injuries sustained by any of the performers.

The Association Workers Compensation Policy would not be able to provide one time Workers Compensation Coverage for these individuals as this is out of the scope of standard HOA Workers Compensation and they are not actual employees. With that said, your Workers Compensation Coverage does pay to defend the Association should an uninsured vendor try to claim employment and coverage. That should be somewhat easy to prove but then, depending on injuries, the injured party could try to go after the General Liability. This is where you would also want to have that waiver in place.

I would ask the organization if all employees are 1099. If not, then I would ask why they don’t have Workers Compensation. If they are all 1099, then I would look at discussing a waiver for any potential injuries with the organization. If they don’t have anything internally then you can discuss with the Association Attorney.

Please let me know if you have any other questions or would like to discuss anything in more detail. Always my pleasure to help.

Thank you,

Kevin Halverson
Equity Partner
Sihle Insurance Group
"The Difference is Service"
Direct: 407.389.3529 | M: 407.766.0190 | F: 407.774.0936
Main Office: 407.869.0962
KHalverson@Sihle.com | www.Sihle.com
1021 Douglas Avenue, Altamonte Springs, FL 32714

This communication, including attachments, is for the exclusive use of addressee and may contain proprietary, confidential or privileged infor
use, copying, disclosure, dissemination or distribution is strictly prohibited. If you are not the intended recipient, please notify the send
communication and destroy all copies.

From: Liz Wargo <liz.wargo@townhall.celebration.fl.us>
Sent: Wednesday, March 27, 2024 8:57 AM
To: Lauren Gunnyon <lauren.gunnyon@townhall.celebration.fl.us>; Kevin Halverson <KHalverson@Sihle.com>
Subject: Re: Worke's Compensation

You don't often get email from liz.wargo@townhall.celebration.fl.us. Learn why this is important

Good Morning Kevin,

Attached is the contract if you need it for reference.

Sincerely,

Liz Wargo
Lifestyle & Communications Director

851 Celebration Ave. • Celebration, FL 34747
www.celebration.fl.us
p: (407) 566-1200 • **f:** (407) 566-1210

From: Lauren Gunnyon <lauren.gunnyon@townhall.celebration.fl.us>
Sent: Wednesday, March 27, 2024 8:33 AM
To: Kevin Halverson <KHalverson@Sihle.com>
Cc: Liz Wargo <liz.wargo@townhall.celebration.fl.us>
Subject: Worke's Compensation

Good Morning Kevin,

We are looking at hiring a band for one of our concerts that does not have worker's compensation coverage as we require.

They have quoted us that it would cost them $6,000 for them to purchase a one-time coverage for our event through their provider.

Is there an option for CJC/CROA to purchase an "event worker's compensation" policy that would cover us for any injuries the performers may potentially sustain? It's a band that is playing on a stage, no crazy theatrics or pyrotechnics or anything of that nature. The information about the group can be found here: https://www.christmaswiththecelts.com/#christmas.

Thank you in advance for your assistance.

Sincerely,

Lauren Gunnyon
Executive Director

851 Celebration Ave. • Celebration, FL 34747
www.celebration.fl.us
P: (407) 566-1200 x2214
F: (407) 566-1210

Distinguished Lifestyle Management of Onsite Communities
grandmanors.com

***** This email is from an EXTERNAL SENDER NOT with Sihle Insurance Group *** Pause. Evaluate. Confirm.**
Were you expecting this email? Does the content make sense? Can you verify the sender? Never login with work credentials from links in email.

“FIRST THERE WAS RIVERDANCE, THEN CELTC WOMAN, AND NOW THE POPULAR PBS PLEDGE SHOW CHRISTMAS WITH THE CELTS WHICH IS TOURING ACROSS AMERICA”

Kevin Crane, PBS

The original national PBS show Christmas with The Celts aired on over 200 PBS channels across the U.S., Canada and on the BBC in Ireland for three years. This successful TV show was the initial spark, which created a huge demand for the production bringing them into Performing Arts Centers, Theaters, and large casinos every year.

The first live performance of Christmas with The Celts was in front of a sold-out audience at the original Grand Ole Opry (voted top venue by Pollstar) the world-famous Ryman Auditorium.

Currently celebrating 14 years of successful national touring, Christmas with the Celts perform a wonderful combination of timeless ancient Irish Christmas Carols and lively Irish dance with modern contemporary songs but with Irish instrumentation. New Christmas hits, Celts originals and fresh Irish Dance tunes are added to the show each year so that no 2 years are the same. Always a pleasant surprise.

An Irish Christmas would not be complete without the unpredictable Irish jokes (craic) and banter that occurs between band members and the audience every year and the always crowd pleasing fiery Irish dancers.

The high-stepping spirited musical selections have audiences clapping along from the first lively renditions of popular contemporary Christmas classics. The show presents a perfect combination of modern Christmas hits, lively ancient Irish Carols, hilarious spontaneous humor, thrilling Irish dancing, a children’s choir and meaningful Christmas ballads with lush string arrangements giving audiences a most memorable interactive Christmas experience.

Show founder, and film score composer Ric Blair says, “You can't listen to Celtic music and not be happy. Christmas with the Celts isn’t just a concert; it is a spiritual experience of music and dance uniting communities. It’s about bringing young and old together. It is a music of the people. I think that is why this unique melding of modern Christmas hits and organic Celtic instrumentation continues to resonate and grow in popularity every year with audiences.”

Christmas with the Celts Promo Video

DYNAMIC
TALENT INTERNATIONAL

Contract #: 16757
Agent: James Leslie
Phone: (916) 235-4538
n/a

THIS CONTRACT made on Thursday, March 21, 2024 between Celebration Residential Owners Association (herein referred as Purchaser) and Scottish Castle Productions, LLC (herein referred as Artist). Both parties are aware that Dynamic Talent International is acting as the agent between both parties.

1. **Artist:** **Christmas With The Celts**
2. **Engagement Venue:** **Celebration Community Field Complex**
   319 Campus Street
   Celebration, FL 34747
   United States
3. **Date of Engagement:** **Thursday, December 19, 2024** **No. Shows: One (1)**
4. **Schedule:**
   Load In - Per Advance
   Sound Check - Per Advance
   6:00pm - Doors
   7:00pm - Christmas With The Celts
   10:00pm - Curfew
5. **Billing:** 100% Private Event
6. **Event Title:** Christmas With The Celts (Private Event)
7. **Age Restriction:** All Ages
8. **Compensation:** $18,000.00 USD Flat Guarantee
9. **Merchandise:** 100% All Merchandise (Artist sells)
10. **Additional Provisions:** Purchaser to provide Six (6) Double Bed Hotel Rooms per artist specifications, Backline per rider / artist specifications, Catering per rider / artist specifications, ground transportation buyout and reimbursement for worker's compensation insurance procurement, per advance.
11. **Travel and Accommodations:** Purchaser to provide:
    - Six (6) Double Bed Hotel Rooms per artist specifications
12. **Event Contacts:**

Promoter Company
Celebration Residential Owners Association
851 Celebration Avenue
Celebration, FL 34747
407-566-1200
celebration.fl.us

Contract Admin
Amber Whittaker
Phone: 689-686-3986
Email:
amber.whittaker@townhall.celebration.fl.us

Ticket Counts
Amber Whittaker
Phone: 689-686-3986
Email:
amber.whittaker@townhall.celebration.fl.us

Day of Show Contact
Amber Whittaker
Phone: 689-686-3986
Email:
amber.whittaker@townhall.celebration.fl.us

Production
aXis Pro Events, Inc
Phone: 407-230-1367
Email: sperry@axisproevents.com

Promoter
Liz Wargo
Phone: 407-973-5456
Email: liz.wargo@townhall.celebration.fl.us

Finals
Liz Wargo
Phone: 407-973-5456
Email: liz.wargo@townhall.celebration.fl.us

13. **Artist Assets:** https://www.christmaswiththecelts.com/
14. **Buyer Signed Contract:** Buyer signed contract and rider due to Dynamic Talent International no later than Thursday, March 28, 2024

15. Tickets:

Tier	*Quantity*	*Comps/Kills*	*Ticket Price*	*Total*
6 Person Table	350	--	$70.00	$24,500.00
4 Person Table	--	--	$50.00	--
Totals	350	--		
			Gross Potential:	$24,500.00
			Net Potential:	$24,500.00

Ticketing Notes

Private event for Celebration residents exclusively, no general admission tickets to be sold.

Ticket prices are for table reservation.

No ticket fees or taxes, to be covered by purchaser.

16. Deposits: All payments shall be paid by PURCHASER in United States Dollar (unless otherwise mentioned) by ACH

Due Date	**Amount**
10/19/2024	$9,000.00

17. Deposit Remittance:

CHECKS:
Dynamic Talent International
PO BOX 279727
Sacramento, CA 95827

BANK WIRE INFO:
Dynamic Talent International
PO Box 279727
Sacramento, CA 95827
state of origin: California
account# 39806002660
Routing# 323371076
Swift for USD: BNNEUS66XXX

This engagement is not to be advertised or publicized in any manner or form until this contract is fully processed and signed by both parties or with out written approval from Artist Management or Dynamic Talent International. This contract may become void if Purchaser fails to sign and return s ame within fourteen(14) days of date issued.

We acknowledge and confirm that we have read and approved the terms and conditions set forth in this contract.Riders attached hereto are he reby made a part hereof.

By: ✖ _____

SIGNATURE OF PURCHASER

CROA Board President
Celebration Residential Owners Association
851 Celebration Avenue
Celebration, FL 34747
Email: liz.wargo@townhall.celebration.fl.us
Phone: 407-566-1200

By: ✖ _____

SIGNATURE OF ARTIST

Ric Blair
% Christmas With The Celts
Nashville, TN
theceltsmusic@gmail.com
615-415-9964

ADDITIONAL TERMS AND CONDITIONS

1. PURCHASER will first apply any and all receipts received from the performance to payment required hereunder. All payments must be in full without any deductions whatsoever. PURCHASER will advise PRODUCER or PRODUCER's agent immediately upon request of the admissions prices for the performance.

2. If the payment to the PRODUCER is based in whole or in part on receipts of the performance(s) hereunder, PURCHASER agrees to deliver to PRODUCER a certified statement of the gross receipts of each performance within (2) hours of such performance. If the payment of PRODUCER's share of performance receipts is based in whole or in part on expenses related to the engagement, PURCHASER shall verify with paid receipts, cancelled checks or other documentation of all expenses or they will not be included as expenses of the engagement. PRODUCER shall have the right to have representation present in the box office at all times. Such representative shall have access to the box office records of PURCHASER relating to gross receipts of this engagement only.

3. PURCHASER will furnish and pay for all its own expense(s) necessary for the proper presentation of the performance on the date and time of the above-mentioned performance. This includes without limitation (a) suitable theater, hall or auditorium, well-heated, ventilated, lighted, clean, and in good order, curtains, properly tuned grand piano(s) and public address system in perfect working condition including microphone(s) in quantity and numbers required by PRODUCER, dressing rooms, all needed electricians and stage hands, all lighting, tickets, house programs, all licenses (including musical performing rights licenses), special police, ushers, ticket sellers, ticket takers, appropriate and sufficient advertising in the primary newspapers; (b) all music royalties connected with PRODUCER's use of music, and additionally the cost of any musicians (including Contractor) other than those furnished by PRODUCER as part of the PRODUCER's regular company; (c) all amusement taxes; (d) if PRODUCER requires, all needed facilities, electricians, stage hands and other personnel for lighting and dress rehearsals; and (e) all other items and personnel (including but not limited to any and all personnel, including musicians, as required by any national or local union(s) required for the proper presentation of the entertainment presentation hereunder and any rehearsals therefore, except those items and personnel which PRODUCER herein specifically agrees to furnish. PRODUCER has the right to rename the local music contractor and to approve the local musicians hired.

4. In the event of sickness or of accident to PRODUCER, or if a performance is prevented, rendered impossible or infeasible by any act or regulation of any public authority or bureau, civil tumult, strike, epidemic, interruption in or delay of transportation services, war conditions or emergencies or any other similar or dissimilar cause beyond the control of PRODUCER, it is understood and agreed there shall be no claim for damages by PURCHASER and PRODUCER's obligations as to such performances shall be waived. In the event of non-performance for any of the above-stated reasons, if ARTISIT is ready, willing and able to perform, PURCHASER shall pay full compensation hereunder, otherwise, the monies (if any) advanced to PRODUCER hereunder, shall be returned on a pro-rata basis.

5. Inclement weather rendering performances impossible, infeasible or unsafe shall not be deemed a force majeure event and payment of the agreed upon compensation shall be made notwithstanding. If PURCHASER and PRODUCER disagree as to whether rendition of the agreed upon compensation shall be made notwithstanding. If PURCHASER and PRODUCER disagree as to whether rendition of performance(s) is impossible, not feasible or unsafe because of inclement weather, PRODUCER's determination as to performance shall prevail.

6. In the event PURCHASER refuses or neglects to provide any of the items or to perform any of its obligations herein stated, and/or fails to make any of the payments as provided herein, PRODUCER shall have the right to refuse to perform the contract, shall retain any amounts theretofore paid to PRODUCER by PURCHASER, and PURCHASER shall remain liable to PRODUCER for the agreed price herein set forth. In addition, if, on or before the date of any scheduled performance, PURCHASER has failed, neglected, or has been impaired or is in PRODUCER's opinion unsatisfactory, PRODUCER shall have the right to demand the payment of the guaranteed compensation forthwith. If PURCHASER fails or refuses to make such payment forthwith, PRODUCER shall have the right to cancel this engagement by notice to PURCHASER to that effect,and to retain any amounts theretofore paid to PRODUCER by PURCHASER and PURCHASER shall remain liable to PRODUCER for the agreed price herein and forth.

7. The entertainment presentation to be furnished by PRODUCER hereunder shall receive billing in such order, form, size and prominence as directed by PRODUCER in all advertising and publicity issued by or under the control of the PURCHASER. PRODUCER's name or likeness may not be used as an endorsement or indication of use of any product or service nor in connection with any corporate sponsorship or tie-up, commercial tie-up or merchandising without PRODUCER's prior written consent.

8. PURCHASER shall not itself, nor shall it permit others to record, broadcast or televise, photograph or otherwise reproduce the visual and/or audio performances hereunder, or any part thereof.

9. PRODUCER shall have the exclusive right to sell souvenir programs, ballet books, photographs, records and any and all types of merchandise including, but not limited to, articles of clothing (i.e. T-shirts, hats, etc.), posters, stickers, etc. on the premises of the place(s) of performance without any participation in the proceeds by PURCHASER subject, however, to concessionaire's requirements, if any.

10. Unless stipulated to the contrary in writing, PURCHASER agrees that PRODUCER many cancel the engagement hereunder without liability by giving the PURCHASER notice thereof at least thirty (30) days prior to the commencement date of the engagement hereunder. PRODUCER shall also have the right to terminate this agreement without liability in the event PURCHASER fails to sign and return this Contract within 10 days.

11. PRODUCER shall have exclusive control over the production, presentation and performance of the engagement hereunder, including, but not limited to, the details, means and methods employed in fulfilling each obligation of PRODUCER hereunder in all respects. PRODUCER shall have the sole right, as PRODUCER may see fit, to designate and change at any time the performing personnel other than the PRODUCER(s) specifically named herein.

12. PURCHASER agrees (a) to comply promptly with PRODUCER's directions as to stage settings for the performance hereunder, (b) that no performers other than those to be furnished by PRODUCER hereunder will appear on or in connection with the engagement hereunder,(c) that no stage seats are to be sold or used without PRODUCER's prior written consent, and (d) that the entertainment presentation will not be included in a subscription or other type of series without the written consent of PRODUCER.

13. Unless stipulated to the contrary in this Agreement, Purchaser agrees that Producer may cancel the Engagement hereunder without liability by giving the Purchaser notice thereof at least thirty(30) days prior to the commencement date of the Engagement hereunder. If performance is canceled with in 30 days of show date a 50% cancelation fee of the full guarantee is due on or before purchaser can fully cancel.

14. It is agreed that PRODUCER signs this contract as an independent contractor and not as an employee. This contract shall not, in any way be construed so as to create a partnership, or any kind of joint undertaking or venture between the parties hereto, nor make provisions hereof or otherwise.

15. Nothing in this Agreement shall require the commission of any act contrary to law or to any rules or regulations of any union, guild or similar body having jurisdiction over the services and personnel to be furnished by PRODUCER to PURCHASER hereunder. If there is any conflict between any provisions of this Agreement and any law, rule or regulation, such law, rule or regulation shall prevail and this Agreement shall be curtailed, modified, or limited only to the extent necessary to eliminate such conflict. PURCHASER agrees to comply with all regulations and requirements of any union(s) that may have jurisdiction over any of the said materials, facilities, and personnel to be furnished by PURCHASER.

16. In the event of any inconsistency between the provisions of this contract and the provisions of any riders, addenda, exhibits or any other attachments hereto, the parties agree that the provisions most favorable to PRODUCER and PRODUCER shall control.

17. PURCHASER hereby indemnifies and holds PRODUCER, as well as their respective agents, representatives, principals, employees, officers and directors, harmless from and against any loss, damage or expense, including reasonable attorney's fees, incurred or suffered by or threatened against PRODUCER or any of the foregoing in connection with or as a result of any claim for personal injury or property damage or otherwise brought by or on behalf of any third party person, form or corporation as a result of or in connection with the engagement, which claim does not result from the active negligence of the PRODUCER.

18. Dynamic Talent International acts herein only as agent for PRODUCER and is not responsible for any act of commission or omission on the part of PRODUCER or PURCHASER. In furtherance thereof and for the benefit of Dynamic Talent International, it is agreed that neither PURCHASER nor PRODUCER will name or join Dynamic Talent International as a party in any civil action or suit arising out of; in connection with, or related to any act(s) of commission or omission of PURCHASER or PRODUCER.

19. This contract (a) cannot be assigned or transferred without the written consent of PRODUCER, (b) contains the sole and complete understanding of the parties hereto and (c) may not be amended, supplemented, varied or discharged, except by an instrument in writing signed by both parties. The validity, construction and effect of this contract shall be governed by the laws of the State of Oregon, regardless of the place of performance. THE PERSON EXECUTING THIS AGREEMENT ON PURCHASER'S BEHALF WARRANTS HIS/HER AUTHORITY TO DO SO, AND SUCH PERSON HEREBY PERSONALLY ASSUMES LIABILITY FOR THE PAYMENT OF SAID PRICE IN FULL. The terms "PRODUCER" and "PURCHASER" as used herein shall include and apply to the singular, the plural and to all genders.

20. Force Majeure

a. A "Force Majeure Event" is defined as one or more of the following causes which renders performance impossible, impracticable, or unsafe: death, illness or injury to Producer or member of Producer's immediate family, any of Producer's musicians, or any of PRODUCER's key personnel; theft, loss, destruction, or breakdown of instruments or equipment owned or leased by PRODUCER; fire; threat(s) or act(s) of terrorism; riot(s) or other form(s) of civil disorder in, around, or near the Performance(s) venue; strike, lockout or other forms of labor difficulties; any act, order, or relation of any court, government agency or public authority; act of God; absence of power or other essential services; failure of technical facilities; failure or delay of transportation not within PRODUCER's reasonable control; inclement weather; and/or any similar or dissimilar cause beyond PRODUCER's or PURCHASER's reasonable control.

b. If a Force Majeure Event occurs, the parties' respective obligations hereunder will be excused fully, without any additional obligation, subject to the provisions of Section 20(c) below, and each of the parties shall bear its own costs incurred in connection with this Agreement.

c. Notwithstanding the foregoing, if Producer is ready and willing to perform, PURCHASER will pay PRODUCER the full amount of the guarantee set forth in this Agreement. Under no circumstances will Producer be liable to Purchaser or any third party in contract, tort, or otherwise, for any indirect, incidental, special, consequential, punitive, exemplary, or similar damages that result from the parties' performance or non performance hereunder, including but not limited to loss of revenue or lost profits, even if Producer has been advised of the possibility of such damages.

Holiday Concert

TBD

$42,630

Revenue

Vendor Name	Item Description	Category	Amount	Notes
Mattamy Homes	Gold Event Sponsorship	Event Sponsorships	$ 5,000.00	Not Invoiced
	4-Person Table Sales (39)		$ 1,950.00	Estimated Revenue
	6-Person Table Sales (47)		$ 3,290.00	Estimated Revenue
REVENUE SUBTOTAL			$ 10,240.00	

Expenditures

Vendor Name	Item Description	Category	Amount	Notes
Christmas with the Celts	Band Cost		$ 18,000.00	Quoted Cost
Christmas with the Celts	Band WC Insurance		$ 6,500.00	Quoted Cost
aXisPro Productions	Production, Lighting, Sound		$ 13,400.00	Quoted Cost
Jones Luxury Restrooms	8-stall Restroom Trailer		$ 2,124.75	Quoted Cost
Osceola County Sheriff	Sheriff Details (3)		$ 1,000.00	Estimated Cost (2023)
TBD	A-Frame Signage		$ 350.00	Estimated Cost (2023)
TBD	Band Lunch		$ 150.00	Estimated Cost (buy-out)
TBD	Band Dinner		$ 480.00	Estimated Cost (buy-out)
TBD	Green Room Supplies		$ 100.00	Estimated Cost
TBD	Childrens Choir Dinner		$ 100.00	Estimated Cost
TBD	Hotel Rooms		$ 1,091.90	Estimated Cost
Sunbelt	Parking Lot Light Towers		$ 871.92	Quoted Cost
CRS	Airstar Lights		$ 900.00	Estimated Cost (2024)
RTW Photography	Photographer		$ 750.00	Estimated Cost (2024)
EXPENDITURES SUBTOTAL			$ 45,818.57	

NET OF REVENUES & EXPENDITURES	$ (35,578.57)
NET AS A PERCENTAGE OF REVENUE	-3.474469727

TOUR RIDER 2024

This contract is between _____ (hereinafter referred to as "PURCHASER" and **Christmas with the Celts** (hereinafter referred to as "ARTIST").
It is agreed as follows:

1. The parties agree that the Show will be held on: (date & time) _____
at: (venue name and address below)

_____

_____

_____

2. Description of Show.
Show will be a musical performance with musical content decided by Band. Show will last approximately 2 hours which includes one 15 minute intermission.

No opening or additional acts may be added without permission from Artist.

3. Payment.
Compensation for the Shows will be $_____ guarantee, payable by **Check made out to Scottish Castle Productions LLC.**

A **deposit of $**_____
is due on the signing of this contract payable by check made out to

Dynamic Talent International LLC. PO Box 279727 Sacramento, CA 95827

Bank of America, N.A. P.O. Box 25118 Tampa, FL 33622-5118

State of Origin: California

Account #: 325145746771 Routing #: 121000358 Swift for USD: BOFAUS3N

contact: admin@dynamictalentint.com

Agent: James Leslie 916-218-6100 ext. 1004 james@dynamictalentint.com

Agent Ben Rossman 916-218-6100 ext. 1006 ben.rossman@dynamictalentint.com

Venue Tech contact info:

Name:_____

Email:_____

Cell phone: _____

This is a required condition for the contract to proceed; if a deposit of _____ is not tendered upon the signing of this contract, no further obligation for either party comes due.

4. Cancellation.
If full payment is not made by the time immediately prior to Band's Show, Show may be cancelled by Band, and Purchaser may not seek any damages. If Show is cancelled prior to 90 days of the performance the Band keeps Purchaser's deposit and does not require any additional fees. If the show is canceled within 90 days of the performance, then Purchaser must pay bands performance fee in its entirety. If Band is forced to cancel due to sickness or act of God at any time prior to ticket sales by Purchaser, Band must refund Fee in its entirety. A rescheduled performance may be allowed only if discussed and agreed upon by both parties, in which case, Band keeps Purchaser's deposit as 50% payment for the rescheduled date.

5. Stage
Purchaser will provide quality stage of at least: 16′ width x 12′ depth; and reliable power source, fit for the band's stage set up, easily accessible and made available the entire course of the performance day.

6. Food and Drink.
Backstage - 24 Bottles of water (important for **water to be at room temperature only** for singers) will be provided backstage for the band along with light refreshments (may include veggie/fruit tray, diet soda, light beer if permissible at venue). 2 meals
Lunch (for 10 performers/crew) – hot sandwiches (chicken, burgers) with chips, assorted veggie tray, soft drinks or $15 per person cash buyout for lunch.
Dinner (for 10 to 16 band, dancers and crew max)– Full meals ie. Chicken, seafood, Indian, or Thai (no pork or beef for dinner please prior to performance) OR Purchaser will provide the Band with a cash buyout (at $30 per person for dinner), before the start of Band's soundcheck
Dinner for Children's Choir only (6 to 20 children) Purchaser is responsible for pizza and soft drinks for children's choir dinner. Cost not to exceed $100.

7. Accommodations
Tour personnel will consist of the following: 5 to 6 musicians, 2 to 3 Irish dancers and 1 TM/FOH for a total of 10 people. A minimum of 6 to 8 double bed rooms will b provided for the night of the performance. Hotel will have consistent favorable online reviews. Hotels with complementary full hot breakfast preferred but not required ie. Hampton Inn, Fairfield Inn etc. Purchaser will consult Band TM on the location of the hotels prior the booking.

8. Sound Systems Check.
A sound check conducted by Band is required, at a time to be mutually arranged between Band and Purchaser. Sound team must have stage fully prepared for Band's arrival according to Band's Tech Sheet.

9. Security, Health, and Safety.
Purchaser warrants that Venue will be of sufficient size to safely conduct Show, that Venue is of stable construction and sufficiently protected from weather, and that there will be adequate security and/or emergency medical responders available if foreseeably necessary. Purchaser maintains sufficient personal injury/property insurance for Venue sufficient to cover foreseeable claims.

10. Indemnification.
Purchaser indemnifies and holds Band harmless for any claims of property damage or bodily injury caused by Show attendees.

11. Arbitration settles disputes.
All claims or disputes by either party from or under this Agreement will be submitted to Any court that would otherwise have had jurisdiction over the dispute will enforce both settlement by the Arbitration Service and any arbitration award. Parties will be their own costs, save that any fee charged by Arbitration Service to submit the case to Arbitration Service may be recovered from the other party in a arbitration award. Any controversies arising between the Band and Purchaser shall be resolved by the Courts of Davidson County under the laws of the state of Tennessee.

12. Advertising.
The Purchaser is required to provide substantial advertising for this event including and not limited to hanging posters in the venue and surrounding area, and advertising through any available online presence (Venue's website, newsletters, social media, ect.) starting no later than 2 month prior to this event.

13. Merchandise
One responsible adult per 500 tickets sold (over 21 years of age with cash handling experience is needed to help set up, counting in/out, selling, and packing up of Artists merchandise. Merchandise help is to arrive no later than 1 hour before the doors open to the public and shall be available to sell before, during and after the concert and remain until all customers have completely dispersed and counted out by Tour Manager.
Also, need one 8' table per 400 tickets sold.

14. Labor Requirements
At least one (1) audio and one (1) Lighting personnel from the venue for load in till closing.
One (1) Merch person as noted above per 500 tickets sold
Two (2) spotlight operators unless otherwise noted

15. Children's Choir
Note: ***Touring history has proven that the addition of a local Children's Choir to the show often helps to create sell out shows as it draws parents, family & friends to buy tickets to see their children perform. Middle school music teachers are the easiest source for securing a choir.***

Therefore, it is strongly suggested that PURCHASER secure one (1) **local middle school** children's choir to perform *Happy Christmas* by *John Lennon* at the end of the show. The children's choir should consist of approximately six (6) to twenty (20) children ages ten (10) to fifteen (15) years old. There will be no financial compensation, but pizza and soft drinks will be provided by the venue.

Please inform the The Children's Choir Director that they can easily download everything that they need (sheet music, mp3 & instructions) by simply going to the bottom of the www.ChristmaswithTheCelts.com website and just click "Press Kit".

16. Comp Tickets: The PURCHASER will set aside up to a maximum of ten (10) complimentary tickets for ARTIST. The Tour Manager will provide the PURCHASER with a "comp list" the day of the concert. We will need seats reserved for our guests in the center of the auditorium, in rows 10 and 11. Any unused tickets will be released the day of the concert to be sold.

17. Taxes PURCHASER shall pay and hold ARTIST harmless of any and all taxes, fees, dues, or any other deductions to the ARTIST relating to the engagement hereunder and all sums payable to ARTIST shall be free of such things.

18. Fly Dates If your show is booked as and noted as a Fly Date as per the main contract or advanced as a Fly Date with the Tour Manager, ground transportation or a buyout may be needed. Please check with Booking Agent at the time of signing the contract to verify.

The below-signed Band Representative warrants s/he has authority to sign this agreement for Band in its entirety. The below signed Purchaser's Representative warrants s/he has authority to bind Purchaser and Venue (above).

Signature of Band Representative:

_____
Purchaser's Signature

_____
Purchaser's Name-Please Print

_____
ARTIST Rep Signature

_____
ARTIST Rep Name-Please Print

CHRISTMAS WITH THE CELTS
Tech Rider
2024

Tour will need professional Audio and Lighting system as well as Backline provided at no cost to ARTIST. The following items below are for the PURCHASER and the House Technical crew to review. Please take care to follow the requirements closely, as it is important to the success of your event. If there are any points of concern, please contact ARTIST'S Production Manager to discuss prior to signing the contract.

a) SOUND CHECK

We require at least 4 hours before the doors open to conduct a full sound check.

b) LOAD-IN/SET-UP AND TEAR-DOWN/LOAD-OUT

The stage needs to be clear of any and all items (i.e. chairs, scenery, etc.). If there are permanent obstructions, they must be noted accurately to the Production Manager during the advance call. Please have the stage set and ready for the band when they arrive for load in. Please see Sec 6a for number of local crew and requirements.

c) STAGE SET UP

The stage should be at least sixteen (16) feet wide, twelve (12) feet deep, with no gaps or protrusions.

Level and smooth as possible. The following items will be needed and in approx. position as per the stage plot prior to load in where applicable.

i) Riser - One (1) 8'x8'x1' with black skirting and a drum rug.
ii) Three (3) sturdy black bar stools.
iii) An area on stage left for Monitor Mix position.
iv) six (6) quad box 110v AC power on two (2) x 20 amp circuits.

d) HOUSE LIGHTS

The venue will need to be 100% fully black at the start of the show. If an unusual situation exists in which any venue or dome lights cannot be turned off for the performance for any reason, please advise the Production Manager during the advance call. Please make arrangements for all lights not specifically required for local safety ordinances to be turned off during the performance. This specifically refers to clocks, scoreboards, advertising billboards, and concessions in the hall.

e) LIGHTING

We are in need of a lighting system that has a five (5) color wash where each color completely covers the whole performance stage from downstage to upstage & stage left to stage right. Please also include up to nine (9) Lekos for band specials. If Available we also request moving head lights to be placed day of show and a console that can operate them.

f) HAZER & FOG MACHINE

Haze is an important part of an Irish music/dance show. Please provide a haze machine with a fan for this performance. Please make adequate preparations with the venue as regards to their smoke and/or fire alarms. Please speak with TM regarding professional Fog Machine specs.

g) COMMUNICATIONS

Communication between the LD and the two (2) spot light positions is needed.

h) **SPOT LIGHT**

ARTIST requires the use of two (2) follow spots.

i) SOUND SYSTEM

PURCHASER will provide ARTIST will a fully functioning Sound System including FOH console and processing, splitsnake, driveline, cables, mics, DI's, stands, etc.

j) PA REQUIREMENTS:

1) **IMPORTANT: ONE 2-WAY MIC SPLITTER SNAKE WITH A MINIMUM OF 32 INPUTS IS REQUIRED. SHOW CANNOT GO ON WITHOUT THIS. PLEASE CONTACT FOH ALAN WENTZ IF THIS IS NOT PERFECTLY UNDERSTOOD. THANK YOU.**

2) A professional stereo, actively processed sound system capable of producing a continuous program level of 95 dB, with peaks of 105 dB (10 dB of headroom) at the mix position of clean, crisp audio with even coverage for every seat in the house from 40 Hz to 16 kHz. If the venue does not have a sufficient sound system then it will need to be hired from a professional sound company. When possible, subs should be run separately from the house PA on an Aux send.

a) **PA shall be completely free of hums, buzzes, mysterious crackles, and blown, rubbing or rattling drivers.**. Properly aligned fills are to be deployed if necessary. Front fill(s), derived from an auxiliary, properly aligned to main PA, are required

b) Where possible, PA should be flown.

c) PA must include proper and adequate amplification for system provided.

d) All proper cabling for speakers, snake and drive system with a 2 way splitter located in Monitor world.

e) **DIGITAL CONSOLE FOR FOH:**

If a digital console is used for FOH.

Yamaha Digital consoles are preferred. Other acceptable digital consoles are AVID (Digidesign)

(D-show, Profile or SC48), Midas and Digico will work if Yamaha is not available for FOH.

f) **FOH REQUIREMENTS**

One (1) FOH console with the following minimum specs:

(a) Minimum of thirty-two (32) mono input channels.

(b) Four (4) stereo return channels.

(c) MONITOR REQUIREMENTS WE will be traveling with our own in ear monitor system and mixer.

k) **MIC STANDS, MICS, DI'S, ETC**

Mics and DI's are to be provided as per input list. Please note that the input list is subject to change. Substitutions are acceptable, but must be discussed and agreed upon with ARTIST Production Manager during advance. The following are needed with regards to the Mics, Splitter, and Stands.

(a) Two (2) Sennheiser UHF wireless mic systems with two (2) e945 handheld transmitters
   (i) If Shure mic systems (preferably with KSM9 or Beta87a capsule. No SM 58's please)

(b) Fresh batteries for sound check and a fresh set for the show for the above wireless units. (Pro-cell or Duracell preferred over other brands.)

(c) **All wireless provided must comply will all FCC and local guidelines and restrictions concerning frequencies.**

(a) All necessary mic cables and sub snakes to patch the stage.

(b) Six (6) short boom mic stands.

(c) Twelve (12) tall boom stands

(d) Four (4) straight mic stand with a round base.

(e) Stage Power

A Minimum of six (6) quad boxes with two (2) x 20 amp circuits of 110v power will be needed. Drummer will need power and 3 DI's for track playback to FOH and Monitor. We will bring wireless for both acoustic guitars, the fiddle, and the Bodhran (Irish hand drum). The wireless have xlr outputs.

BACKLINE

PURCHASER is responsible for providing the following backline for the show. Please note that backline is subject to change. Production Manager will verify Backline needs during the advance.

i) DRUM KIT – Pearl (Reference Pure, Masters or Similar), DW, Yamaha

- 22" kick drum
- 10" or 12" Rack Tom (mounted on tom stand or clamps)
- 14" floor tom (needs tom legs, no tom stands)
- 16" floor tom (needs tom legs, no tom stands)
- 14" Snare Drum (Pearl Brass Sensitone, Reference Maple or Similar)
- (1) Full Drum Shield

ii) DRUM HARDWARE – DW, Ludwig, or Tama

- (1) HiHat stand (2 Legs)
- (1) Snare Drum Stand
- (1) Tom Mount Stand
- (3) Boom Arm Cymbal Stands
- (1) splash cymbal arm attachment or its own stand
- (1) Pearl RedLine Single Pedal (Or DW 9000 Single Pedal)
- (1) Drum Throne (Tractor style if possible))
- (3-6) Floor Tom Legs (3 if one floor tom, 6 if 2 toms)l
- (1) Drum Rug
-

iii) CYMBALS – SABIAN Cymbals (HHX, AAX, or similar)

- 22" Ride (dry/dark)
- 20" Crash
- 18" Crash
- 14" or 15" hi hats
- 8" or 10" splash

iv) DRUM HEADS

- Drum heads must be new and installed. Please bring a spare snare head top & bottom.
- Snare head: Remo controlled sound coated black dot
- Toms: Remo clear Ambassadors
- Kick: Either Remo Powersonic Clear or Evans EMAD

II) BASS AMP & CABINET One (1) - Professional quality bass guitar Combo amp or Head and speaker cabinet. (Aguilar Amplification, Ashdown, Ampeg and Markbass are preferred but not required)

(2) Hercules Guitar Stands (ie. 1 for guitarist and 1 for bassist)

III) GRAND PIANO One (1) In-house (venue only) grand or baby grand piano, with piano tuner after final placement on-stage, to be scheduled w/production manager, TBA day-of. If a grand piano cannot be obtained, a professional, quality, realistic sounding piano keyboard such as the Yamaha P-35 digital piano may be substituted in some cases. If using digital piano will also need, sustain pedal, and appropriate cables for stereo output to DIs, one (1) - single tier adjustable keyboard stand and piano bench."

ANY YAMAHA "P" OR "CP" SERIES KEYBOARD / STAGE PIANO WILL BE FINE , IF NO ACOUSTIC

Christmas With The Celts Input List 2023

Channel	Instrument	Mic/DI	Details	Stand	Notes
1	Kick	Audix D6 / Beta 52		Short Boom	
2	Snare	Audix i5 / Sm57		Short Boom	
3	High Hat	Audix adx 51 / Sm81		Short Boom	
4	Rack 1	Audix D2 / Beta98 / Beta56		Clip On Mounts	
5	Floor	Audix D6, D4 / Beta 52, 56		Clip On Mounts	
6	Floor 2	Audix D6, D4 / Beta 52, 56		Clip On Mounts	
7	Ovh FOH L	Audix adx 51 / Sm81		Tall Tripod Boom	
8	Ovh FOH R	Audix adx 51 / Sm81		Tall Tripod Boom	
9	Bodhran	Wireless we provide		X	
10	Bass	DI		X	
11	Guitar 1 - Cut Away Ric	Wireless we provide		X	We provide
12	Guitar 2 - Standard Ric	Wireless we provide		X	We provide
13	Fiddle - Luisa	Wireless we provide		X	We provide
14	Piano L	Akg C414 / DI		Tall Tripod Boom	If Electronic Keys Di, no Stands
15	Piano R	Akg C414 / DI		Tall Tripod Boom	If Electronic Keys Di, no Stands
16	Pipe Chanter (Hi)	Audix adx 51 / Sm81		Short Tripod Boom	
17	Pipe Drone (Lo)	Audix adx 51 / Sm81		Short Tripod Boom	
18	Piper Whistle	Sennheiser , Sm58		Tall Tripod Boom	
19	Ric Vox	Sennheiser , Shure	Venue Wireless	Tall Tripod Boom	If Shure KSM9, Beta 87a
20	Luisa Vox	Sennheiser , Shure	Venue Wireless	Tall Tripod Boom	If Shure KSM9, Beta 87a
21	Ric Piano Vox	We Provide e945	Comp	Tall Tripod Boom	We provide Mic
22	Track L	DI		X	
23	Track R	DI		X	
24	Click	DI		X	Must be a Passive DI
25	Floor Mics For Dancers	Crown Pcc160 / Beta 91	Any Boundary Mic	X	Across the front of the stage
26	Floor Mics For Dancers	Crown Pcc160 / Beta 91	Any Boundary Mic	X	evenly placed
27	Floor Mics For Dancers	Crown Pcc160 / Beta 91	Any Boundary Mic	X	
28					
29	Choir L Foh	Large Diaphragm Condenser		Tall Tripod Boom	Small Diaphragm Condenser will
30	Choir R Foh	Large Diaphragm Condenser		Tall Tripod Boom	work if Large is not Available

CHRISTMAS WITH THE CELTS
Stage Plot 2023

Legend: DI : ◻ Power : ⊗ Bass Rig : Keys : 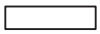

We need 4 straight round base stands for the purpose of holding our monitor controllers at the positions of : Drums, Bass, and 2 in front of the drum riser.

Note: Stage Plot is Subject to Change

Stage power should have a minimum of eight (8), 20A 110v AC outlets (standard Edison plug).

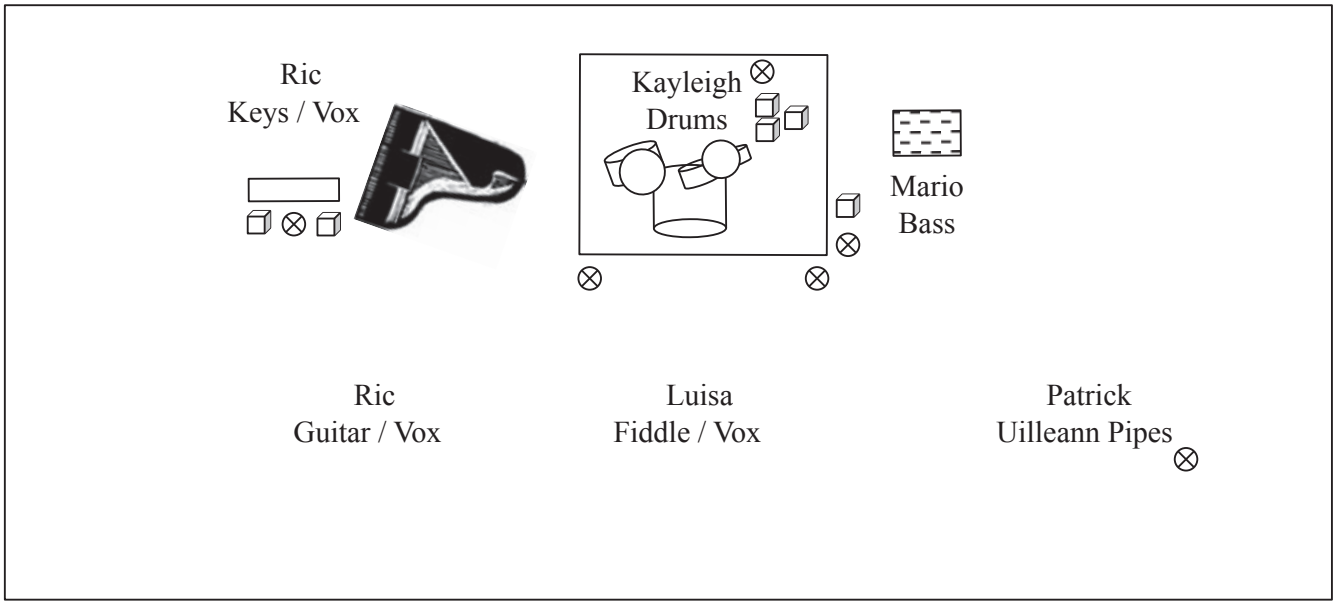

STAGE RIGHT **AUDIENCE** **STAGE LEFT**

PIANO (MENTIONED ABOVE) IS AVAILABLE.

I, the PURCHASER, have read and understand that this contract rider will be treated as part of the legally binding performance contract that I have entered into with the ARTISTS. By signing below, I agree to fulfill the requirements laid out for me in this rider. I understand that if I have any questions or problems regarding this rider, I will contact ARTIST Management before signing this or the Tour Manager after this agreement is signed well in advance of the date of the event to discuss the situation and come to a reasonable, agreeable resolution to the situation at hand. Furthermore, I understand the importance of all the items covered in this rider.

_____ _____

Purchaser Signature Date

_____

Purchaser Name - Please Print

_____ _____

ARTIST Rep Signature Date

_____

ARTIST Rep Name - Please Print

Discussion Item L

CROA Owned Easements near Academy Row
Landscaping Improvements

Discussion Item M

Reserve Park Landscaping Improvements

Awaiting additional bids

Exquisite Lawn Care
52 Riley Rd #402
Celebration, FL 34747 US
+1 4077195944
billing@exquisitelawncare.com
www.exquisitelawncare.com

EXQUISITE LAWN CARE
407 719 5944

Estimate

ADDRESS
CROA
Celebration Residential
Owner's Assc
851 Ave
Celebration,
Celebration, FL 34747

ESTIMATE # 2669
DATE 02/13/2024

DATE		DESCRIPTION	QTY	RATE	AMOUNT
		Reserve Park			
	Pavers	Pavers- Install pavers in an oval shape with 2 entrance/exit paths	1	18,516.00	18,516.00
	Plant Installation	3 Gallon plant material installed	64	22.00	1,408.00
	Demo & Site Prep	Demolition & Site Preparation	4	65.00	260.00
	Mulch	Mulch- pine straw installed	15	9.00	135.00
	Plant Installation	1 Gallon Plant material installed	150	9.00	1,350.00
	Plant Installation	1 Gallon Asiatic Jasmine to fill in around tree ring	50	9.00	450.00
	Design Fee	Landscape Design Fee from Architect	1	2,000.00	2,000.00
		Estimated Start Date: Scheduling pending approval			
		Length of project: 2 day			
		Warranty: Plants/ Shrubs/ Trees The plant material installed is warranted for a			

DATE	DESCRIPTION	QTY	RATE	AMOUNT
	period of 30 days from the date of installation (the “Warranty Period”). Subject to the following terms and conditions. Seasonal flowers (perennial and annual) are not included in this warranty coverage. Plant material covered by this limited warranty, which dies during the Warranty Period will be replaced with the plant material of like variety and original size, one time only, provided that the account is paid full per terms of the agreement. In order to insure the survival of replacement plant materials, replanting will be done only during appropriate planting seasons when weather conditions are favorable. The Warranty Period shall not be extended in the event that replacement plantings are required during the Warranty Period. As a condition of this limited warranty, you are responsible to properly maintain the plant material during the Warranty Period. This limited warranty shall not cover the death of plant material caused by vandalism or uncontrollable acts of nature, which shall include but shall not be limited to, high winds, drought, fluids, and hurricane. If Exquisite Lawn Care is maintaining the property, This warranty is further extended to a 1 year period. Sod/ Turfgrass Warrantied from the grower to be weed free for 30 days. Warrantied from			

DATE	DESCRIPTION	QTY	RATE	AMOUNT
	Exquisite Lawn Care for 30 days when installed in full sun. There is no warranty when installed in shade. If Exquisite Lawn Care is maintaining the property, This warranty is further extended to a 3 month period.			

SUBTOTAL	24,119.00
TAX	0.00
TOTAL	**$24,119.00**

Accepted By

Accepted Date

Celebration Residential Owners Association (CROA)

RESERVE PARK BID RESPONSE FORM

Name of Firm Submitting Proposal:

Exquisite Lawn Care

(Print or Type)

Name of Person Submitting Proposal:

Brian Causey

(Print or Type)

Email of Person Submitting Proposal:

(Print or Type)

Phone of Person Submitting Proposal:

(Print or Type)

I _____, on behalf of _____, submit the following bids as indicated below:

Item	Unit(s)	Cost
Demolition & Prep		260.00
Paver Installation	Install in an oval shape with 2 entrance/exit paths	18,516.00
Plant Installation	Approx: (64) 3-gallon	1,408.00
Plant Installation	Approx: (150) 1-gallon	1,350.00
Plant Installation	Approx: Asiatic Jamine/fill in around tree	$450.00
Plant Installation	Approx:	
Landscape design	Landscape design fee	$2,000.00
Mulch Replacement	pine straw	135.00
Disposal of Old Materials		
Total:		$24,119.00

Estimated Project Start Date	Estimated Project End Date
Pending approval	Length of project 2-days

Deliverables	Time Frame

Executed by:

Signature **Date**

This document must be completed and returned with your submittal.

Agent Name **Agent Title**

This document must be completed and returned with your submittal.

Discussion Item N

Roseling Park Landscaping Improvements

Awaiting additional bids

Exquisite Lawn Care
52 Riley Rd #402
Celebration, FL 34747 US
+1 4077195944
billing@exquisitelawncare.com
www.exquisitelawncare.com

EXQUISITE LAWN CARE
407 719 5944

Estimate

ADDRESS
CROA
Celebration Residential
Owner's Assc
851 Ave
Celebration,
Celebration, FL 34747

ESTIMATE # 2727
DATE 03/12/2024

DATE		DESCRIPTION	QTY	RATE	AMOUNT
		Roseling Park			
	Plant Installation	1 Gallon Asiatic Jasmine installed	275	9.00	2,475.00
	Plant Installation	1 Gallon Blue Daze installed	140	9.00	1,260.00
	Plant Installation	1 Gallon Liriope installed	350	9.00	3,150.00
	Plant Installation	3 Gallon Sheflera installed	50	22.00	1,100.00
	Plant Installation	3 Gallon Formosa Azalea installed	48	22.00	1,056.00
	Plant Installation	3 Gallon Blue Iris installed	12	22.00	264.00
	Mulch	Mulch	140	9.00	1,260.00
		Estimated Start Date: Scheduling pending approval			
		Length of project: 2 day			
		Warranty: Plants/ Shrubs/ Trees The plant material installed is warranted for a period of 30 days from the date of installation (the "Warranty Period"). Subject to the following terms and			

DATE	DESCRIPTION	QTY	RATE	AMOUNT
	conditions. Seasonal flowers (perennial and annual) are not included in this warranty coverage. Plant material covered by this limited warranty, which dies during the Warranty Period will be replaced with the plant material of like variety and original size, one time only, provided that the account is paid full per terms of the agreement. In order to insure the survival of replacement plant materials, replanting will be done only during appropriate planting seasons when weather conditions are favorable. The Warranty Period shall not be extended in the event that replacement plantings are required during the Warranty Period. As a condition of this limited warranty, you are responsible to properly maintain the plant material during the Warranty Period. This limited warranty shall not cover the death of plant material caused by vandalism or uncontrollable acts of nature, which shall include but shall not be limited to, high winds, drought, fluids, and hurricane. If Exquisite Lawn Care is maintaining the property, This warranty is further extended to a 1 year period. Sod/ Turfgrass Warrantied from the grower to be weed free for 30 days. Warrantied from Exquisite Lawn Care for 30 days when installed in full sun. There is no warranty when installed in shade.			

DATE	DESCRIPTION	QTY	RATE	AMOUNT
	If Exquisite Lawn Care is maintaining the property, This warranty is further extended to a 3 month period.			

SUBTOTAL	10,565.00
TAX	0.00
TOTAL	**$10,565.00**

Accepted By

Accepted Date

ROSELING PARK BID RESPONSE FORM

Name of Firm Submitting Proposal:

Exquisite Lawn Care

(Print or Type)

Name of Person Submitting Proposal:

Brian Causey

(Print or Type)

Email of Person Submitting Proposal:

(Print or Type)

Phone of Person Submitting Proposal:

(Print or Type)

I _____, on behalf of _____, submit the following bids as indicated below:

Item	Unit(s)	Cost
Demolition & Prep		
Plant Installation	Approx: 1-gallon Asiatic Jasmine	$2,475.00
Plant Installation	Approx: 1-gallon Blue Daze	$1,260.00
Plant Installation	Approx: 1-gallon Liriope	$3,150.00
Plant Installation	Approx: 3-gallon sheflera	$1,100.00
Plant Installation	Approx: 3-gallon Azalea	$1,056.00
Plant Installation	Approx: 3-gallon Blue Iris	$264.00
Mulch Replacement	pine straw	$1,260.00
Disposal of Old Materials		
Total:		$10,565.00

Estimated Project Start Date	Estimated Project End Date
Pending approval	Length of project 2-days

Deliverables	Time Frame

Executed by:

Signature **Date**

Agent Name **Agent Title**

This document must be completed and returned with your submittal.

This document must be completed and returned with your submittal.

Discussion Item O

Hippodrome Park Landscaping Improvements

Awaiting additional bids

Exquisite Lawn Care
52 Riley Rd #402
Celebration, FL 34747 US
+1 4077195944
billing@exquisitelawncare.com
www.exquisitelawncare.com

EXQUISITE LAWN CARE
407 719 5944

Estimate

ADDRESS
CROA
Celebration Residential
Owner's Assc
851 Ave
Celebration,
Celebration, FL 34747

ESTIMATE # 2670
DATE 02/13/2024

DATE		DESCRIPTION	QTY	RATE	AMOUNT
		Hippodrome Park			
	Plant Installation	3 Gallon plant material installed	848	22.00	18,656.00
	Special Trimming	Special Trimming- Cut back all Schillings to uniform height	10	55.00	550.00
	Irrigation Repair	Irrigation Repair- adjustments	1	500.00	500.00
	Sod	sod installation-Outside perimeter St Augustine	1,300	1.45	1,885.00
	Sod	sod installation- Inside field Bermuda	9,450	1.45	13,702.50
	Demo & Site Prep	Demolition & Site Preparation	120	55.00	6,600.00
	Mulch	Mulch- chocolate mulch installed	320	9.00	2,880.00
	Plant Installation	7 Gallon Plant Material installed	12	40.00	480.00
	Plant Installation	1 Gallon Plant material installed	1,014	9.00	9,126.00
	Tree Trimming	Tree replacement- One of the Magnolia trees at the Campus end of the park is not the same species as the other. For aesthetic	1	6,000.00	6,000.00

DATE		DESCRIPTION	QTY	RATE	AMOUNT
		purposes only, we recommend removing the Little Gem Magnolia and replacing with a 100 Gallon Southern Magnolia			
	Tree Trimming	Tree replacement- Removal of 11 Shumard Oaks combined on both sides of the park along Greenbriar. These trees are unhealthy, dead, or dying. The Shumard Oaks at the ends of the park appear to be in good health. We recommend replacing with a combination of Crepe Myrtles and Japanese Blueberry trees at 100 Gallons each. We will need 12 replacement trees	12	4,500.00	54,000.00
	Design Fee	Landscape Design Fee from Architect Estimated Start Date: Scheduling pending approval Length of project: 2 day Warranty: Plants/ Shrubs/ Trees The plant material installed is warranted for a period of 30 days from the date of installation (the “Warranty Period”). Subject to the following terms and conditions. Seasonal flowers (perennial and annual) are not included in this warranty coverage. Plant material covered by this limited warranty, which dies during the Warranty Period will be replaced with the plant material of like variety and original size, one time only, provided that the account is paid full per terms of the agreement. In order to insure the survival of replacement plant materials, replanting will be	1	3,500.00	3,500.00

DATE	DESCRIPTION	QTY	RATE	AMOUNT
	done only during appropriate planting seasons when weather conditions are favorable. The Warranty Period shall not be extended in the event that replacement plantings are required during the Warranty Period. As a condition of this limited warranty, you are responsible to properly maintain the plant material during the Warranty Period. This limited warranty shall not cover the death of plant material caused by vandalism or uncontrollable acts of nature, which shall include but shall not be limited to, high winds, drought, fluids, and hurricane. If Exquisite Lawn Care is maintaining the property, This warranty is further extended to a 1 year period. Sod/ Turfgrass Warrantied from the grower to be weed free for 30 days. Warrantied from Exquisite Lawn Care for 30 days when installed in full sun. There is no warranty when installed in shade. If Exquisite Lawn Care is maintaining the property, This warranty is further extended to a 3 month period.			

SUBTOTAL	117,879.50
TAX	0.00
TOTAL	**$117,879.50**

Accepted By

Accepted Date

HIPPODROME PARK BID RESPONSE FORM

Name of Firm Submitting Proposal:

Exquisite Lawn Care

(Print or Type)

Name of Person Submitting Proposal:

Brian Causey

(Print or Type)

Email of Person Submitting Proposal:

(Print or Type)

Phone of Person Submitting Proposal:

(Print or Type)

I _____, on behalf of _____, submit the following bids as indicated below:

Item	Unit(s)	Cost
Design Fees		$3,500.00
Plant Installation	Approx: (3-Gallon)	$18,656.00
Special Trimming	Trim	$550.00
Irrigation Repair	Flat Rate for all zones	$500.00
Sod	Interior Bermuda Replacement (9,500 sq ft)	$13,702.50
Sod	Change Exterior Bermuda to St. Augustine (1,300 Sq. Ft)	$1,885.00
Demolition & Prep		$6,600.00
Mulch Replacement	Approx: 140 Units	$2,.880.00
Plant Installation	Approx: 12 (7 Gallon)	$480.00
Plant Installation	Approx 1000 (1- Gallon)	$9,126.00
Tree Replacement	Replace 1 Little Gem Magnolia with Southern Magnolia	$6000.00
Tree Replacement	Replace 11 Shumard Oaks with Crepe Myrtles (12)	$54,000.00
		$117,879.50

Estimated Project Start Date	Estimated Project End Date
Pending approval	Length of project 2 days

Deliverables	Time Frame

This document must be completed and returned with your submittal.

Executed by:

Signature	**Date**
Agent Name	**Agent Title**

This document must be completed and returned with your submittal.

Discussion Item P

Lakeside Grill Project

Discussion Item Q

Sunshade Structures for East Village, Island Village and Pool Equipment

1. Topline
2. 360 Recreation

Awaiting additional bids

FROM

Jennifer Garcia
Powered By Play
9986 Eagle Creek Center Blvd
Orlando, Fl 32832
360recreation.com/

PHONE
888-360-Park (7275)

FOR
Town of Celebration

TO
Jeffrey Webb

EMAIL
jeffrey.webb@townhall.celebration.fl.us

ADDRESS
851 Celebration Avenue
Celebration
FL 34747

QUOTE NUMBER
820

DATE
April 4, 2024

VALID UNTIL
May 3, 2024

TOWN OF CELEBRATION - INLET POINT PLAYGROUND SUNSHADE

Sunshade - Inlet Point 4 Post Hip - 24' x 25' x 10' - Dig 24" x 5' pier w/ 6 #6 verticals; #3 rings @ 12" O. C. The-Modern-Shade-Difference MSLLC Warranty	8,428.00 x 1 8,428.00
Equipment Installation	6,294.00 x 1 6,294.00
SED'S Signed, Sealed and Stamped Engineered Drawings with Calculations	1,267.00 x 1 1,267.00
Freight Shipping - GOOD FOR 30 DAYS	2,135.00 x 1 2,135.00

Subtotal	18,124.00
Total including tax	**$18,124.00**

NOTES

Prices are valid for 30 days. After 30 days, prices are subject to change without notice. Sales tax will be charged unless a copy of a valid Sales tax exemption certificate is presented with the order. Site work, building permits, engineered drawings, etc. are not included unless noted. If Underground utilities locate services are needed, it is the customer's responsibility by utilizing Sunshine 811 (free) or a private independent locating firm. Any additional work requested that isn't covered in the original brief will be quoted separately and added to the original invoice.

The parties, by their signature below, agree that all material terms have been disclosed and rely upon the information contained in this document. Buyer agrees to pay one half (1/2) of the amount at the time of signing this Agreement. The remaining one half (1/2) shall be payable upon completion of the job. If the remaining balance is not paid in full within 30 days of completion, interest shall accrue at the rate of 1.5 % per month. If litigation is necessary to collect on this agreement, the prevailing party shall be entitled to recover reasonable attorney's fees and costs from the non-prevailing party.

50% DEPOSIT REQUIRED TO INITIATE ORDER

FROM

Jennifer Garcia
Powered By Play
9986 Eagle Creek Center Blvd
Orlando, Fl 32832
360recreation.com/

PHONE
888-360-Park (7275)

FOR
Town of Celebration

TO
Jeffrey Webb

EMAIL
jeffrey.webb@townhall.celebration.fl.us

ADDRESS
851 Celebration Avenue
Celebration
FL 34747

QUOTE NUMBER
818

DATE
April 4, 2024

VALID UNTIL
May 3, 2024

TOWN OF CELEBRATION - ISLAND VILLAGE WAY POOL EQUIPMENT SUNSHADE

Sunshade - Pool Equipment 4 Post Hip - 24' x 15' x 8' - Dig 24" x 4' pier w/ 6 #5 verticals; #3 rings @ 12" O. C. The-Modern-Shade-Difference MSLLC Warranty	5,878.00 x 1 5,878.00
Equipment Installation	4,390.00 x 1 4,390.00
Haul Off Dirt and Debris from footers	1,000.00 x 1 1,000.00
SED'S Signed, Sealed and Stamped Engineered Drawings with Calculations	1,267.00 x 1 1,267.00
Freight Shipping - GOOD FOR 30 DAYS	2,135.00 x 1 2,135.00

Subtotal	14,670.00
Total including tax	**$14,670.00**

NOTES

Prices are valid for 30 days. After 30 days, prices are subject to change without notice. Sales tax will be charged unless a copy of a valid Sales tax exemption certificate is presented with the order. Site work, building permits, engineered drawings, etc. are not included unless noted. If Underground utilities locate services are needed, it is the customer's responsibility by utilizing Sunshine 811 (free) or a private independent locating firm. Any additional work requested that isn't covered in the original brief will be quoted separately and added to the original invoice.

The parties, by their signature below, agree that all material terms have been disclosed and rely upon the information contained in this document. Buyer agrees to pay one half (1/2) of the amount at the time of signing this Agreement. The remaining one half (1/2) shall be payable upon completion of the job. If the remaining balance is not paid in full within 30 days of completion, interest shall accrue at the rate of 1.5 % per month. If litigation is necessary to collect on this agreement, the prevailing party shall be entitled to recover reasonable attorney's fees and costs from the non-prevailing party.

50% DEPOSIT REQUIRED TO INITIATE ORDER

360 RECREATION

FROM

Jennifer Garcia
Powered By Play
9986 Eagle Creek Center Blvd
Orlando, Fl 32832
360recreation.com/

PHONE
888-360-Park (7275)

FOR
Town of Celebration

TO
Jeffrey Webb

EMAIL
jeffrey.webb@townhall.celebration.fl.us

ADDRESS
851 Celebration Avenue
Celebration
FL 34747

QUOTE NUMBER
819

DATE
April 4, 2024

VALID UNTIL
May 3, 2024

TOWN OF CELEBRATION - OAK SHADOW PLAYGROUND SUNSHADE

Sunshade - Oak Shadow 4 Post Hip - 24' x 32' x 9' - Dig 24" x 6' pier w/ 6 #6 verticals; #3 rings @ 12" O. C. MSLLC Warranty	9,400.00 x 1 9,400.00
Equipment Installation	7,035.00 x 1 7,035.00
Haul Off Dirt and debris from footers.	1,000.00 x 1 1,000.00
SED'S Signed, Sealed and Stamped Engineered Drawings with Calculations	1,267.00 x 1 1,267.00
Freight Shipping - GOOD FOR 30 DAYS	2,135.00 x 1 2,135.00

Subtotal	20,837.00
Total including tax	**$20,837.00**

NOTES

Prices are valid for 30 days. After 30 days, prices are subject to change without notice. Sales tax will be charged unless a copy of a valid Sales tax exemption certificate is presented with the order. Site work, building permits, engineered drawings, etc. are not included unless noted. If Underground utilities locate services are needed, it is the customer's responsibility by utilizing Sunshine 811 (free) or a private independent locating firm. Any additional work requested that isn't covered in the original brief will be quoted separately and added to the original invoice.

The parties, by their signature below, agree that all material terms have been disclosed and rely upon the information contained in this document. Buyer agrees to pay one half (1/2) of the amount at the time of signing this Agreement. The remaining one half (1/2) shall be payable upon completion of the job. If the remaining balance is not paid in full within 30 days of completion, interest shall accrue at the rate of 1.5 % per month. If litigation is necessary to collect on this agreement, the prevailing party shall be entitled to recover reasonable attorney's fees and costs from the non-prevailing party.

50% DEPOSIT REQUIRED TO INITIATE ORDER

FROM

Jennifer Garcia
Powered By Play
9986 Eagle Creek Center Blvd
Orlando, Fl 32832
360recreation.com/

PHONE
888-360-Park (7275)

FOR
Town of Celebration

TO
Jeffrey Webb

EMAIL
jeffrey.webb@townhall.celebration.fl.us

ADDRESS
851 Celebration Avenue
Celebration
FL 34747

QUOTE NUMBER
817

DATE
April 4, 2024

VALID UNTIL
May 3, 2024

TOWN OF CELEBRATION - SPRING PARK ST. POOL EQUIPMENT SUNSHADE

Sunshade - Spring Park Pool Equipment 4 Post Hip - 11' x 18' x 8' - Dig 18" x 4' pier w/ 6 #5 verticals; #3 rings @ 12" O. C. The-Modern-Shade-Difference MSLLC Warranty (14)	4,584.00 x 1 4,584.00
Equipment Installation	3,427.00 x 1 3,427.00
Haul Off Footer dirt and debris	1,000.00 x 1 1,000.00
SED'S Signed, Sealed and Stamped Engineered Drawings with Calculations	1,267.00 x 1 1,267.00
Freight Shipping - GOOD FOR 30 DAYS	2,135.00 x 1 2,135.00

Subtotal	12,413.00
Total including tax	**$12,413.00**

NOTES

Prices are valid for 30 days. After 30 days, prices are subject to change without notice. Sales tax will be charged unless a copy of a valid Sales tax exemption certificate is presented with the order. Site work, building permits, engineered drawings, etc. are not included unless noted. If Underground utilities locate services are needed, it is the customer's responsibility by utilizing Sunshine 811 (free) or a private independent locating firm. Any additional work requested that isn't covered in the original brief will be quoted separately and added to the original invoice.

The parties, by their signature below, agree that all material terms have been disclosed and rely upon the information contained in this document. Buyer agrees to pay one half (1/2) of the amount at the time of signing this Agreement. The remaining one half (1/2) shall be payable upon completion of the job. If the remaining balance is not paid in full within 30 days of completion, interest shall accrue at the rate of 1.5 % per month. If litigation is necessary to collect on this agreement, the prevailing party shall be entitled to recover reasonable attorney's fees and costs from the non-prevailing party.

50% DEPOSIT REQUIRED TO INITIATE ORDER

Celebration Residential Owners Association (CROA)

BID RESPONSE FORM

Name of Firm Submitting Proposal:

Top Line Recreation

(Print or Type)

Name of Person Submitting Proposal:

Debbie Lloyd

(Print or Type)

Email of Person Submitting Proposal:

debbie@toplinerec.com

(Print or Type)

Phone of Person Submitting Proposal:

407-579-1410

(Print or Type)

I Debbie Lloyd, on behalf of Top Line Recreation, submit the following bids as indicated below:

LOCATION: INLET POINT PLAYGROUND 2-5 HIP SHADE

Item	Unit(s)	Cost
Time		
Posts (If needed)	4	
Costs of Equipment (Shade Structure & Canopy)	1	$16,873.33
Installation – includes footers	1	$16,561.25
Permitting (If required)	1	$1,062.50
Misc Costs - LOCATES	1	$1,062.50
Landscaping Cost –	Turf Patch	$4,692.19
Disposal of Old Materials		
Other: ENG DWG & CAL.	1	$1,250.00
FREIGHT		$1,138.75
DISCOUNT		- $2,000.00
TAX		$1,265.50

Estimated Project Start Date	Estimated Project End Date
Upon receipt of PO	3 ½ - 4 months to completion

Deliverables	Time Frame
Engineer Drawing	3-6 weeks
Shade Production	8-9 weeks
Installation	1-2 weeks

Executed by:

Debbie Lloyd — 4-4-24

Signature — **Date**

Top Line Recreation / Project Consultant

Agent Name — **Agent Title**

This document must be completed and returned with your submittal.

Celebration Residential Owners Association (CROA)

BID RESPONSE FORM

Name of Firm Submitting Proposal:

Top Line Recreation

(Print or Type)

Name of Person Submitting Proposal:

Debbie Lloyd

(Print or Type)

Email of Person Submitting Proposal:

debbie@toplinerec.com

(Print or Type)

Phone of Person Submitting Proposal:

407-579-1410

(Print or Type)

I Debbie Lloyd, on behalf of Top Line Recreation, submit the following bids as indicated below:

LOCATION: INLET POINT CLIMBER PLAYGROUND SQUARE HIP SHADE

Item	Unit(s)	Cost
Time		
Posts (If needed)	4	
Costs of Equipment (Shade Structure & Canopy)	1	$20,925.33
Installation – includes footers	1	$19,423.75
Permitting (If required)	1	$1,062.50
Misc Costs - LOCATES	1	$1,062.50
Landscaping Cost –		
Disposal of Old Materials		
Other: ENG DWG & CAL.	1	$1,250.00
FREIGHT		$1,412.50
DISCOUNT		- $2,300.00
TAX		$1,569.40

Estimated Project Start Date	Estimated Project End Date
Upon receipt of PO	3 ½ - 4 months to completion

Deliverables	Time Frame
Engineer Drawing	3-6 weeks
Shade Production	8-9 weeks
Installation	1-2 weeks

Executed by:

Debbie Lloyd — 4-4-24

Signature — **Date**

Top Line Recreation / Project Consultant

Agent Name — **Agent Title**

This document must be completed and returned with your submittal.

Celebration Residential Owners Association (CROA)

BID RESPONSE FORM

Name of Firm Submitting Proposal:

Top Line Recreation

(Print or Type)

Name of Person Submitting Proposal:

Debbie Lloyd

(Print or Type)

Email of Person Submitting Proposal:

debbie@toplinerec.com

(Print or Type)

Phone of Person Submitting Proposal:

407-579-1410

(Print or Type)

I Debbie Lloyd, on behalf of Top Line Recreation, submit the following bids as indicated below:

LOCATION: ISLAND VILLAGE POOL EQUIPMENT CANTILEVER SHADE

Item	Unit(s)	Cost
Time		
Posts (If needed)	2	
Costs of Equipment (Shade Structure & Canopy)	1	$13,884.00
Installation – includes footers	1	$9,550.00
Permitting (If required)	1	$1,062.50
Misc Costs - LOCATES	1	$1,062.50
Landscaping Cost – Included in Install		
Disposal of Old Materials		
Other: ENG DWG & CAL.	1	$1,250.00
FREIGHT		$937.50
DISCOUNT		- $1,400.00
TAX		$1,041.30

Estimated Project Start Date	Estimated Project End Date
Upon receipt of PO	3 ½ - 4 months to completion

Deliverables	Time Frame
Engineer Drawing	3-6 weeks
Shade Production	8-9 weeks
Installation	1-2 weeks

Executed by:

Debbie Lloyd — 4/4/24

Signature — **Date**

Top Line Recreation / Project Consultant

Agent Name — **Agent Title**

This document must be completed and returned with your submittal.

Celebration Residential Owners Association (CROA)

BID RESPONSE FORM

Name of Firm Submitting Proposal:

Top Line Recreation

(Print or Type)

Name of Person Submitting Proposal:

Debbie Lloyd

(Print or Type)

Email of Person Submitting Proposal:

debbie@toplinerec.com

(Print or Type)

Phone of Person Submitting Proposal:

407-579-1410

(Print or Type)

I Debbie Lloyd, on behalf of Top Line Recreation, submit the following bids as indicated below:

LOCATION: OAK SHADOWS RD. PLAYGROUND – OPTION 1A SAIL SHADE

Item	Unit(s)	Cost
Time		
Posts (If needed)	3	$13,910.00
Costs of Equipment (Shade Fabric Canopy)	1	$3,937.14
Installation – includes footers	1	$24,460.00
Permitting (If required)	1	$1,062.50
Misc Costs - LOCATES	1	$1,062.50
Landscaping Cost	Patch Turf	$4,692.19
Disposal of Old Materials		
Other: ENG DWG & CAL.	1	$1,250.00
FREIGHT		$1,598.75
DISCOUNT		- $2,500.00
TAX		$1,338.54

Estimated Project Start Date	Estimated Project End Date
Upon receipt of PO	3 ½ - 4 months to completion

Deliverables	Time Frame
Engineer Drawing	3-6 weeks
Shade Production	8-9 weeks
Installation	1-2 weeks

Executed by:

Debbie Lloyd — 4/4/24

Signature — **Date**

Top Line Recreation / Project Consultant

Agent Name — **Agent Title**

This document must be completed and returned with your submittal.

Celebration Residential Owners Association (CROA)

BID RESPONSE FORM

Name of Firm Submitting Proposal:

Top Line Recreation

(Print or Type)

Name of Person Submitting Proposal:

Debbie Lloyd

(Print or Type)

Email of Person Submitting Proposal:

debbie@toplinerec.com

(Print or Type)

Phone of Person Submitting Proposal:

407-579-1410

(Print or Type)

I Debbie Lloyd, on behalf of Top Line Recreation, submit the following bids as indicated below:

LOCATION: OAK SHADOWS RD. PLAYGROUND – OPTION 1B HIP SHADE

Item	Unit(s)	Cost
Time		
Posts (If needed)	4	
Costs of Equipment (Shade Structure & Canopy)	1	$12,170.00
Installation – includes footers	1	$18,960.00
Permitting (If required)	1	$1,062.50
Misc Costs - LOCATES	1	$1,062.50
Landscaping Cost	Patch Turf	$4,692.19
Disposal of Old Materials		
Other: ENG DWG & CAL.	1	$1,250.00
FREIGHT		$1,565.00
DISCOUNT		- $2,000.00
TAX		$912.75

Estimated Project Start Date	Estimated Project End Date
Upon receipt of PO	3 ½ - 4 months to completion

Deliverables	Time Frame
Engineer Drawing	3-6 weeks
Shade Production	8-9 weeks
Installation	1-2 weeks

Executed by:

Debbie Lloyd — 4-4-24

Signature — **Date**

Top Line Recreation / Project Consultant

Agent Name — **Agent Title**

This document must be completed and returned with your submittal.

Celebration Residential Owners Association (CROA)

BID RESPONSE FORM

Name of Firm Submitting Proposal:

Top Line Recreation

(Print or Type)

Name of Person Submitting Proposal:

Debbie Lloyd

(Print or Type)

Email of Person Submitting Proposal:

debbie@toplinerec.com

(Print or Type)

Phone of Person Submitting Proposal:

407-579-1410

(Print or Type)

I Debbie Lloyd, on behalf of Top Line Recreation, submit the following bids as indicated below:

LOCATION: SPRING PARK POOL EQUIPMENT CANTILEVER SHADE

Item	Unit(s)	Cost
Time		
Posts (If needed)	2	
Costs of Equipment (Shade Structure & Canopy)	1	$10,493.33
Installation – includes footers	1	$11,761.25
Permitting (If required)	1	$1,062.50
Misc Costs - LOCATES	1	$1,062.50
Landscaping Cost – Included in Install		
Disposal of Old Materials		
Other: ENG DWG & CAL.	1	$1,250.00
FREIGHT		$1,177.50
DISCOUNT		- $1,200.00
TAX		$787.00

Estimated Project Start Date	Estimated Project End Date
Upon receipt of PO	3 ½ - 4 months to completion

Deliverables	Time Frame
Engineer Drawing	3-6 weeks
Shade Production	8-9 weeks
Installation	1-2 weeks

Executed by:

Debbie Lloyd — 4-4-24

Signature — **Date**

Top Line Recreation / Project Consultant

Agent Name — **Agent Title**

This document must be completed and returned with your submittal.

GENERAL CONTRACTOR'S SWORN STATEMENT

Escrow No.: 01

STATE OF FLORIDA
COUNTY OF VOLUSIA } SS

THE UNDERSIGNED, being duly sworn, on oath deposes and says that he/she is the PRESIDENT (Title)

of TOP LINE RECREATION INC (General Contractor), the contractor employed to furnish labor and materials for the

EAST VILLA PALYGROUND SAIL SHADE /HIP SHADE (Description of Work) work on the building(s) (the Premises) located at

OAK SHADOW AVE and 851 CELEBRATION AVE , CELEBRATION, FL 34747 (Address of Premises),

and of which SONIA M PERKINS (Owner) is the owner. That the persons, firms and corporations whose names have been set forth on this Sworn Statement are all of the persons, firms, and corporations hired by the undersigned to furnish services, equipment, labor, and/or materials in the construction or repair of the improvements on the Premises; that the dollar amount set opposite each person, firm, or corporation in this Sworn Statement is the exact and total amount due or to become due to each such person, firm, or corporation on account of labor, services, equipment, and/or materials furnished with respect to said Premises; that as of this date, all work to be performed with respect to said Premises by the undersigned or any suppliers or subcontractors of the undersigned or any of the persons, firms, or corporations named in this Sworn Statement, has been fully accepted by the owner and completed according to the plans and specifications.

The undersigned further states that all material (except as disclosed herein) has been or will be furnished from his/her own stock and has been paid for in full; that there are no other contracts or subcontracts for said work outstanding, and that there is nothing due or to become due to any person for services, equipment, material, labor, or any other work done in connection with said work other than that stated on said Sworn Statement. There are no chattel mortgages, personal property leases, conditional sale contracts, or any other agreements given or are now outstanding as to any fixtures, equipment, appliances, or material placed upon or installed in or upon the aforementioned Premises or improvements thereon. All waivers are true, correct, and genuine, and are delivered unconditionally. Furthermore, there is no claim, either legal or equitable, to defeat the validity of said waivers.

Signed this 03 (Day) day of APRIL (Month), 2024 (Year)

Name: TOP LINE RECREATION INC (Individual/Corporation/Partnership)

By: Sonia Perkins

PRESIDENT (Title)

Subscribed and sworn before me this 3 (Day) day of April (Month), 2024 (Year)

J Janelle
Notary Public

NOTARY PUBLIC STATE OF FLORIDA

JENNIFER JANELLE
Commission # HH 379138
Expires March 27, 2027

2024 Florida Annual Resale Certificate for Sales Tax

DR-13
R. 10/23

This Certificate Expires on December 31, 2024

Business Name and Location Address

Certificate Number

74-8017064943-7

TOP LINE RECREATION INC
2922 HOWLAND BLVD STE 4
DELTONA, FL 32725-2900

By extending this certificate or the certificate number to a selling dealer to make eligible purchases of taxable property or services exempt from sales tax and discretionary sales surtax, the person or business named above certifies that the taxable property or services purchased or rented will be resold or re-rented for one or more of the following purposes:

- Resale as tangible personal property
- Re-rental as tangible personal property
- Resale of services
- Re-rental as commercial real property
- Incorporation into tangible personal property being repaired
- Re-rental as transient rental property
- Incorporation as a material, ingredient, or component part of tangible personal property that is being produced for sale by manufacturing, compounding, or processing

Your *Florida Annual Resale Certificate for Sales Tax* (Annual Resale Certificate) allows you or your representatives to buy or rent property or services tax exempt when the property or service is resold or re-rented. You **may not** use your Annual Resale Certificate to make tax-exempt purchases or rentals of property or services that will be used by your business or for personal purposes. Florida law provides for criminal and civil penalties for fraudulent use of an Annual Resale Certificate.

As a seller, you must document each tax-exempt sale for resale using one of three methods. You can use a different method each time you make a tax-exempt sale for resale.

1. Obtain a copy (paper or electronic) of your customer's current Annual Resale Certificate.
2. For each sale, obtain a transaction authorization number using your customer's Annual Resale Certificate number.
3. Each calendar year, obtain annual vendor authorization numbers for your regular customers using their Annual Resale Certificate numbers.

Online: Visit **floridarevenue.com/taxes/certificates**

Phone: 877-357-3725 and enter your customer's Annual Resale Certificate number

Mobile App: Available for iPhone, iPad, and Android devices

State of Florida
Department of State

I certify from the records of this office that TOPLINE RECREATION INC. is a corporation organized under the laws of the State of Florida, filed on August 17, 2011, effective August 16, 2011.

The document number of this corporation is P11000073376.

I further certify that said corporation has paid all fees due this office through December 31, 2024, that its most recent annual report/uniform business report was filed on January 3, 2024, and that its status is active.

I further certify that said corporation has not filed Articles of Dissolution.

Given under my hand and the Great Seal of the State of Florida at Tallahassee, the Capital, this the Third day of January, 2024

GREAT SEAL OF THE STATE OF FLORIDA
IN GOD WE TRUST

Secretary of State

Tracking Number: 6575965205CC

To authenticate this certificate,visit the following site,enter this number, and then follow the instructions displayed.

https://services.sunbiz.org/Filings/CertificateOfStatus/CertificateAuthentication

CERTIFICATE OF LIABILITY INSURANCE

DATE (MM/DD/YYYY): 2/28/2024

THIS CERTIFICATE IS ISSUED AS A MATTER OF INFORMATION ONLY AND CONFERS NO RIGHTS UPON THE CERTIFICATE HOLDER. THIS CERTIFICATE DOES NOT AFFIRMATIVELY OR NEGATIVELY AMEND, EXTEND OR ALTER THE COVERAGE AFFORDED BY THE POLICIES BELOW. THIS CERTIFICATE OF INSURANCE DOES NOT CONSTITUTE A CONTRACT BETWEEN THE ISSUING INSURER(S), AUTHORIZED REPRESENTATIVE OR PRODUCER, AND THE CERTIFICATE HOLDER.

IMPORTANT: If the certificate holder is an ADDITIONAL INSURED, the policy(ies) must have ADDITIONAL INSURED provisions or be endorsed. If SUBROGATION IS WAIVED, subject to the terms and conditions of the policy, certain policies may require an endorsement. A statement on this certificate does not confer rights to the certificate holder in lieu of such endorsement(s).

PRODUCER
Cooper Risk Advisors, LLC
PO Box 638
904 N Main Street
Lapel IN 46051

CONTACT NAME: Bill Hodgkins
PHONE (A/C, No, Ext): 321-214-1990 **FAX (A/C, No):** 765-534-2067
E-MAIL ADDRESS: billh@cooperindiana.com

INSURER(S) AFFORDING COVERAGE	NAIC #
INSURER A : Cincinnati Specialty Un Ins Co	13037
INSURER B : Evanston Insurance Company	35378
INSURER C : Old Dominion Insurance Company	40231
INSURER D :	
INSURER E :	
INSURER F :	

INSURED TOPLINE-01
Top Line Recreation, Inc.
2922 Howland Blvd., Suite 3
Deltona FL 32725

COVERAGES **CERTIFICATE NUMBER:** 913562918 **REVISION NUMBER:**

THIS IS TO CERTIFY THAT THE POLICIES OF INSURANCE LISTED BELOW HAVE BEEN ISSUED TO THE INSURED NAMED ABOVE FOR THE POLICY PERIOD INDICATED. NOTWITHSTANDING ANY REQUIREMENT, TERM OR CONDITION OF ANY CONTRACT OR OTHER DOCUMENT WITH RESPECT TO WHICH THIS CERTIFICATE MAY BE ISSUED OR MAY PERTAIN, THE INSURANCE AFFORDED BY THE POLICIES DESCRIBED HEREIN IS SUBJECT TO ALL THE TERMS, EXCLUSIONS AND CONDITIONS OF SUCH POLICIES. LIMITS SHOWN MAY HAVE BEEN REDUCED BY PAID CLAIMS.

INSR LTR	TYPE OF INSURANCE	ADDL INSD	SUBR WVD	POLICY NUMBER	POLICY EFF (MM/DD/YYYY)	POLICY EXP (MM/DD/YYYY)	LIMITS	
A	X COMMERCIAL GENERAL LIABILITY	Y	Y	CSU0142752	11/21/2023	11/21/2024	EACH OCCURRENCE	$ 1,000,000
	CLAIMS-MADE [X] OCCUR						DAMAGE TO RENTED PREMISES (Ea occurrence)	$ 100,000
	X XCU						MED EXP (Any one person)	$ 1,000
							PERSONAL & ADV INJURY	$ 1,000,000
	GEN'L AGGREGATE LIMIT APPLIES PER:						GENERAL AGGREGATE	$ 3,000,000
	POLICY [X] PRO-JECT [ ] LOC						PRODUCTS - COMP/OP AGG	$ 3,000,000
	OTHER:							$
C	AUTOMOBILE LIABILITY			CA00021590	1/1/2024	1/1/2025	COMBINED SINGLE LIMIT (Ea accident)	$ 1,000,000
	X ANY AUTO						BODILY INJURY (Per person)	$
	OWNED AUTOS ONLY / SCHEDULED AUTOS						BODILY INJURY (Per accident)	$
	X HIRED AUTOS ONLY / X NON-OWNED AUTOS ONLY						PROPERTY DAMAGE (Per accident)	$
								$
B	UMBRELLA LIAB [X] OCCUR	Y	Y	EZXS3137652	11/21/2023	11/21/2024	EACH OCCURRENCE	$ 4,000,000
	X EXCESS LIAB [ ] CLAIMS-MADE						AGGREGATE	$ 4,000,000
	DED [X] RETENTION $ $0.00							$
	WORKERS COMPENSATION AND EMPLOYERS' LIABILITY Y / N						PER STATUTE / OTH-ER	
	ANYPROPRIETOR/PARTNER/EXECUTIVE OFFICER/MEMBEREXCLUDED? [ ] N / A						E.L. EACH ACCIDENT	$
	(Mandatory in NH) If yes, describe under DESCRIPTION OF OPERATIONS below						E.L. DISEASE - EA EMPLOYEE	$
							E.L. DISEASE - POLICY LIMIT	$
A	Professional Liability/E&O			CSU0142752	11/21/2023	11/21/2024	Occurrence Aggregate	1,000,000 3,000,000

DESCRIPTION OF OPERATIONS / LOCATIONS / VEHICLES (ACORD 101, Additional Remarks Schedule, may be attached if more space is required)
CROA is named as Additional Insured with respect to General Liability when required by written contract/agreement. Coverage is Primary & Non-Contributory for completed and ongoing operations. Waiver of Subrogation is in favor of the Additional Insureds. Excess policy follows form.

CERTIFICATE HOLDER
CROA
851 Celebration Ave
Celebration FL 34747
USA

CANCELLATION
SHOULD ANY OF THE ABOVE DESCRIBED POLICIES BE CANCELLED BEFORE THE EXPIRATION DATE THEREOF, NOTICE WILL BE DELIVERED IN ACCORDANCE WITH THE POLICY PROVISIONS.

AUTHORIZED REPRESENTATIVE
W'E Jr

© 1988-2015 ACORD CORPORATION. All rights reserved.

The ACORD name and logo are registered marks of ACORD

THIS ENDORSEMENT CHANGES THE POLICY. PLEASE READ IT CAREFULLY.

WAIVER OF TRANSFER OF RIGHTS OF RECOVERY AGAINST OTHERS TO US - PER CONTRACT

This endorsement modifies insurance provided under the following:

COMMERCIAL GENERAL LIABILITY COVERAGE PART
PRODUCTS/COMPLETED OPERATIONS LIABILITY COVERAGE PART

The following is added to Paragraph **8. Transfer of Rights of Recovery Against Others to Us** of **SECTION IV - CONDITIONS:**

If you have agreed, in a written contract or agreement, to provide a waiver of any right of recovery against a person or organization, we will waive any right of recovery we may have against that person or organization because of payments we make for injury or damage arising out of your ongoing operations or "your work" done under a contract with that person or organization and included in the "products-completed operations hazard". This waiver applies only to that person or organization for which you have agreed to in a written contract to provide said waiver.

Includes copyrighted material of Insurance Services Office, Inc., with its permission.

THIS ENDORSEMENT CHANGES THE POLICY. PLEASE READ IT CAREFULLY.

ADDITIONAL INSURED - OWNERS, LESSEES OR CONTRACTORS - AUTOMATIC STATUS WHEN REQUIRED IN CONSTRUCTION AGREEMENT WITH YOU - OPERATIONS AND COMPLETED OPERATIONS

This endorsement modifies insurance provided under the following:

COMMERCIAL GENERAL LIABILITY COVERAGE PART

A. SECTION II - WHO IS AN INSURED is amended to include as an additional insured any person or organization when you and such person or organization have agreed in writing in a contract or agreement that such person or organization be added as an additional insured on your policy, but only with respect to "bodily injury", "property damage" or "personal and advertising injury" caused, in whole or in part, by:

1. Your acts or omissions in the performance of your ongoing operations for the additional insured;
2. The acts or omissions of those acting on your behalf in the performance of your ongoing operations for the additional insured; or
3. "Your work" performed for the additional insured and included in the "products-completed operations hazard".

If not specified otherwise in the written contract or agreement, a person's or organization's status as an additional insured under this endorsement ends one year after your operations for that additional insured are completed. The written contract or agreement must be currently in effect or become effective during the term of this Coverage Part. The contract or agreement must be executed prior to the "bodily injury", "property damage" or "personal and advertising injury" to which this endorsement pertains.

However:

1. The insurance afforded to such additional insured only applies to the extent permitted by law; and
2. If coverage provided to the additional insured is required by a contract or agreement, the insurance afforded to such additional insured will not be broader than that which you are required by the contract or agreement to provide for such additional linsured.

B. With respect to the insurance afforded to these additional insureds, the following additional exclusions apply:

This insurance does not apply to:

1. "Bodily injury", "property damage" or "personal and advertising injury" arising out of the rendering of, or the failure to render, any professional architectural, engineering or surveying services, including:
   a. The preparing, approving, or failing to prepare or approve, maps, shop drawings, opinions, reports, surveys, field orders, change orders or drawings and specifications; or
   b. Supervisory, inspection, architectural or engineering activities.
2. "Bodily injury" or "property damage" arising out of "your work" for which a consolidated (wrap-up) insurance program has been provided by the prime contractor/project manager or owner of the construction project in which you are involved.
3. "Bodily injury", "property damage" or "personal and advertising injury" to any employee of you or to any obligation of the additional insured to indemnity another because of damages arising out of such injury.

Includes copyrighted material of ISO Properties, Inc., with its permission.

4. "Bodily injury", "property damage" or "personal and advertising injury" for which the Named Insured is afforded no coverage under this policy of insurance.

C. With respect to the insurance afforded to these additional insureds, **SECTION III - LIMITS OF INSURANCE** is amended to include:

The limits applicable to the additional insured are those specified in the written contract or agreement or in the Declarations of this Coverage Part, whichever is less. If no limits are specified in the written contract or agreement, the limits applicable to the additional insured are those specified in the Declarations of this Coverage Part. The limits of insurance are inclusive of and not in addition to the limits of insurance shown in the Declarations.

D. With respect to the insurance afforded to these additional insureds, **SECTION IV - COMMERCIAL GENERAL LIABILITY CONDITIONS, 4. Other Insurance** is amended to include:

Any coverage provided herein will be excess over any other valid and collectible insurance available to the additional insured whether primary, excess, contingent or on any other basis unless you have agreed in a written contract or written agreement executed prior to any loss that this insurance will be primary. This insurance will be noncontributory only if you have so agreed in a written contract or written agreement executed prior to any loss and this coverage is determined to be primary.

Includes copyrighted material of ISO Properties, Inc., with its permission.

CERTIFICATE OF LIABILITY INSURANCE

DATE (MM/DD/YYYY): 02/27/2024

THIS CERTIFICATE IS ISSUED AS A MATTER OF INFORMATION ONLY AND CONFERS NO RIGHTS UPON THE CERTIFICATE HOLDER. THIS CERTIFICATE DOES NOT AFFIRMATIVELY OR NEGATIVELY AMEND, EXTEND OR ALTER THE COVERAGE AFFORDED BY THE POLICIES BELOW. THIS CERTIFICATE OF INSURANCE DOES NOT CONSTITUTE A CONTRACT BETWEEN THE ISSUING INSURER(S), AUTHORIZED REPRESENTATIVE OR PRODUCER, AND THE CERTIFICATE HOLDER.

IMPORTANT: If the certificate holder is an ADDITIONAL INSURED, the policy(ies) must have ADDITIONAL INSURED provisions or be endorsed. If SUBROGATION IS WAIVED, subject to the terms and conditions of the policy, certain policies may require an endorsement. A statement on this certificate does not confer rights to the certificate holder in lieu of such endorsement(s).

PRODUCER Marsh McLennan Agency, LLC - Bouchard Region 101 North Starcrest Drive Clearwater, FL 33765	**CONTACT NAME:** **PHONE (A/C, No, Ext):** (727) 447-6481 **FAX (A/C, No):** **E-MAIL ADDRESS:**
INSURED FrankCrum 8, Inc. Alt. Emp: Topline Recreation Inc. 100 South Missouri Avenue Clearwater, FL 33756	**INSURER(S) AFFORDING COVERAGE** — **NAIC #** INSURER A : American Zurich Insurance Company — 40142 INSURER B : INSURER C : INSURER D : INSURER E : INSURER F :

COVERAGES **CERTIFICATE NUMBER:** 23FL0801030846 **REVISION NUMBER:**

THIS IS TO CERTIFY THAT THE POLICIES OF INSURANCE LISTED BELOW HAVE BEEN ISSUED TO THE INSURED NAMED ABOVE FOR THE POLICY PERIOD INDICATED. NOTWITHSTANDING ANY REQUIREMENT, TERM OR CONDITION OF ANY CONTRACT OR OTHER DOCUMENT WITH RESPECT TO WHICH THIS CERTIFICATE MAY BE ISSUED OR MAY PERTAIN, THE INSURANCE AFFORDED BY THE POLICIES DESCRIBED HEREIN IS SUBJECT TO ALL THE TERMS, EXCLUSIONS AND CONDITIONS OF SUCH POLICIES. LIMITS SHOWN MAY HAVE BEEN REDUCED BY PAID CLAIMS.

INSR LTR	TYPE OF INSURANCE	ADDL INSD	SUBR WVD	POLICY NUMBER	POLICY EFF (MM/DD/YYYY)	POLICY EXP (MM/DD/YYYY)	LIMITS	
	COMMERCIAL GENERAL LIABILITY						EACH OCCURRENCE	$
	☐ CLAIMS-MADE ☐ OCCUR						DAMAGE TO RENTED PREMISES (Ea occurrence)	$
							MED EXP (Any one person)	$
							PERSONAL & ADV INJURY	$
	GEN'L AGGREGATE LIMIT APPLIES PER:						GENERAL AGGREGATE	$
	☐ POLICY ☐ PRO-JECT ☐ LOC						PRODUCTS - COMP/OP AGG	$
	OTHER:							$
	AUTOMOBILE LIABILITY						COMBINED SINGLE LIMIT (Ea accident)	$
	☐ ANY AUTO						BODILY INJURY (Per person)	$
	☐ OWNED AUTOS ONLY ☐ SCHEDULED AUTOS						BODILY INJURY (Per accident)	$
	☐ HIRED AUTOS ONLY ☐ NON-OWNED AUTOS ONLY						PROPERTY DAMAGE (Per accident)	$
								$
	☐ UMBRELLA LIAB ☐ OCCUR						EACH OCCURRENCE	$
	☐ EXCESS LIAB ☐ CLAIMS-MADE						AGGREGATE	$
	☐ DED ☐ RETENTION $							$
A	WORKERS COMPENSATION AND EMPLOYERS' LIABILITY ANYPROPRIETOR/PARTNER/EXECUTIVE OFFICER/MEMBER EXCLUDED? ☐ Y/N **(Mandatory in NH)** If yes, describe under DESCRIPTION OF OPERATIONS below	N/A	X	WC 47-58-512-12	06/01/2023	06/01/2024	X PER STATUTE ☐ OTH-ER	
							E.L. EACH ACCIDENT	$ 1,000,000
							E.L. DISEASE - EA EMPLOYEE	$ 1,000,000
							E.L. DISEASE - POLICY LIMIT	$ 1,000,000
				Location Coverage Period:	06/01/2023	06/01/2024	**Client#** 81940-FL	

DESCRIPTION OF OPERATIONS / LOCATIONS / VEHICLES (ACORD 101, Additional Remarks Schedule, may be attached if more space is required)

Coverage is provided for only those co-employees of, but not subcontractors to:
Topline Recreation Inc.
2922 Howland Blvd Ste 3
Deltona, FL 32725

Endorsements: Waiver of Subrogation

CERTIFICATE HOLDER

CROA
851 Celebration Ave
Celebration, FL 34747

CANCELLATION

SHOULD ANY OF THE ABOVE DESCRIBED POLICIES BE CANCELLED BEFORE THE EXPIRATION DATE THEREOF, NOTICE WILL BE DELIVERED IN ACCORDANCE WITH THE POLICY PROVISIONS.

AUTHORIZED REPRESENTATIVE

Jodel George

© 1988-2015 ACORD CORPORATION. All rights reserved.

WAIVER OF OUR RIGHT TO RECOVER FROM OTHERS ENDORSEMENT

We have the right to recover our payments from anyone liable for an injury covered by this policy. We will not enforce our right against the person or organization named in the Schedule. (This agreement applies only to the extent that you perform work under a written contract that requires you to obtain this agreement from us.)

This agreement shall not operate directly or indirectly to benefit anyone not named in the Schedule.

Schedule

IN FAVOR OF:

CROA
851 Celebration Ave
Celebration, FL 34747

WORK PERFORMED BY CO-EMPLOYEES OF:

Topline Recreation Inc.
2922 Howland Blvd Ste 3
Deltona, FL 32725

ON THE FOLLOWING PROJECT:

FEE FOR THIS WAIVER IS:

Premium will be waived

This endorsement changes the policy to which it is attached and is effective on the date issued unless otherwise stated.
(The information below is required only when this endorsement is issued subsequent to preparation of the policy.)

Endorsement Effective: 02/27/2024 Policy No: WC 47-58-512-12 Endorsement No:

Insured: FrankCrum 8, Inc. Alt. Emp: Topline Recreation Inc. Premium: $

Insurance Company: American Zurich Insurance Company Countersigned By:

Authorized Representative

Copyright 1983 National Council on Compensation Insurance.

Form **W-9**
(Rev. October 2018)
Department of the Treasury
Internal Revenue Service

Request for Taxpayer Identification Number and Certification

▶ **Go to *www.irs.gov/FormW9* for instructions and the latest information.**

Give Form to the requester. Do not send to the IRS.

Print or type. See Specific Instructions on page 3.

1 Name (as shown on your income tax return). Name is required on this line; do not leave this line blank.

TOP LINE RECREATION INC

2 Business name/disregarded entity name, if different from above

3 Check appropriate box for federal tax classification of the person whose name is entered on line 1. Check only **one** of the following seven boxes.

☐ Individual/sole proprietor or single-member LLC ☐ C Corporation ☑ S Corporation ☐ Partnership ☐ Trust/estate

☐ Limited liability company. Enter the tax classification (C=C corporation, S=S corporation, P=Partnership) ▶ _____

Note: Check the appropriate box in the line above for the tax classification of the single-member owner. Do not check LLC if the LLC is classified as a single-member LLC that is disregarded from the owner unless the owner of the LLC is another LLC that is **not** disregarded from the owner for U.S. federal tax purposes. Otherwise, a single-member LLC that is disregarded from the owner should check the appropriate box for the tax classification of its owner.

☐ Other (see instructions) ▶

4 Exemptions (codes apply only to certain entities, not individuals; see instructions on page 3):

Exempt payee code (if any) _____

Exemption from FATCA reporting code (if any) _____

(Applies to accounts maintained outside the U.S.)

5 Address (number, street, and apt. or suite no.) See instructions.

2922 HOWLAND BLVD ST 4

Requester's name and address (optional)

6 City, state, and ZIP code

DELTONA, FL 32725

7 List account number(s) here (optional)

Part I Taxpayer Identification Number (TIN)

Enter your TIN in the appropriate box. The TIN provided must match the name given on line 1 to avoid backup withholding. For individuals, this is generally your social security number (SSN). However, for a resident alien, sole proprietor, or disregarded entity, see the instructions for Part I, later. For other entities, it is your employer identification number (EIN). If you do not have a number, see *How to get a TIN*, later.

Note: If the account is in more than one name, see the instructions for line 1. Also see *What Name and Number To Give the Requester* for guidelines on whose number to enter.

Social security number

			–			–				

or

Employer identification number

4	5	–	3	0	0	9	1	0	9

Part II Certification

Under penalties of perjury, I certify that:

1. The number shown on this form is my correct taxpayer identification number (or I am waiting for a number to be issued to me); and
2. I am not subject to backup withholding because: (a) I am exempt from backup withholding, or (b) I have not been notified by the Internal Revenue Service (IRS) that I am subject to backup withholding as a result of a failure to report all interest or dividends, or (c) the IRS has notified me that I am no longer subject to backup withholding; and
3. I am a U.S. citizen or other U.S. person (defined below); and
4. The FATCA code(s) entered on this form (if any) indicating that I am exempt from FATCA reporting is correct.

Certification instructions. You must cross out item 2 above if you have been notified by the IRS that you are currently subject to backup withholding because you have failed to report all interest and dividends on your tax return. For real estate transactions, item 2 does not apply. For mortgage interest paid, acquisition or abandonment of secured property, cancellation of debt, contributions to an individual retirement arrangement (IRA), and generally, payments other than interest and dividends, you are not required to sign the certification, but you must provide your correct TIN. See the instructions for Part II, later.

Sign Here | **Signature of U.S. person ▶** Sonia Perez **Date ▶** 01-01-2024

General Instructions

Section references are to the Internal Revenue Code unless otherwise noted.

Future developments. For the latest information about developments related to Form W-9 and its instructions, such as legislation enacted after they were published, go to *www.irs.gov/FormW9*.

Purpose of Form

An individual or entity (Form W-9 requester) who is required to file an information return with the IRS must obtain your correct taxpayer identification number (TIN) which may be your social security number (SSN), individual taxpayer identification number (ITIN), adoption taxpayer identification number (ATIN), or employer identification number (EIN), to report on an information return the amount paid to you, or other amount reportable on an information return. Examples of information returns include, but are not limited to, the following.

- Form 1099-INT (interest earned or paid)
- Form 1099-DIV (dividends, including those from stocks or mutual funds)
- Form 1099-MISC (various types of income, prizes, awards, or gross proceeds)
- Form 1099-B (stock or mutual fund sales and certain other transactions by brokers)
- Form 1099-S (proceeds from real estate transactions)
- Form 1099-K (merchant card and third party network transactions)
- Form 1098 (home mortgage interest), 1098-E (student loan interest), 1098-T (tuition)
- Form 1099-C (canceled debt)
- Form 1099-A (acquisition or abandonment of secured property)

Use Form W-9 only if you are a U.S. person (including a resident alien), to provide your correct TIN.

If you do not return Form W-9 to the requester with a TIN, you might be subject to backup withholding. See What is backup withholding, *later.*

QUOTE

QUOTE #	TLRQ5565-03
PROJECT NAME	Inlet Point

Top Line Recreation Inc.
2922 Howland Blvd, Suite 3, Deltona, FL 32725
386-575-8359

Bill to:
Jeffrey Webb
Celebration Residents Owners Association
851 Celebration Avenue
Celebration, FL 34747
863-604-0480
jeffrey.webb@townhall.celebration.fl.us

Ship to:
Jeffrey Webb
Celebration Residents Owners Association
Inlet Point
7417 Inlet Point
Celebration, FL 34747
863-604-0480
jeffrey.webb@townhall.celebration.fl.us

SALESPERSON	PAYMENT TERMS	QUOTE CREATED	QUOTE EXPIRES
Debbie Lloyd	NET 30	Apr 4, 2024	May 6, 2024

QTY	PART NUMBER	DESCRIPTION	UNIT PRICE	TOTAL PRICE
		Inlet Point 2-5 Play Quote 3		
1	SUP74572	Inlet Point Playground 2-5 Superior 20' x 38' x 11' H Hip Shade with 4 columns, stainless steel hardware and cables, includes Elbow Glide. Anchor bolts to be supplied by manufacturer.	$16,873.33	$16,873.33
1	ENG1SUP	FL Engineer Sealed Drawings & Calculations	$1,250.00	$1,250.00
1	FREIGHT	Charges to Celebration, FL 34747	$1,138.75	$1,138.75
1	INSTALL	Buildworx Prep Site & Installation. BWX to cut and pull back existing turf. Footer dirt to be hauled away. Includes repair to any concrete playground borders due to placement of footers close to edge. Includes plywood to drive over to protect turf and sidewalk. ForeverLawn will pull turf back in place and re-seam.	$16,561.25	$16,561.25
1	LOCATES	Ground Hound underground penetrating radar	$1,062.50	$1,062.50
1	TURF	Turf Patch and Repair from shade installation	$4,692.19	$4,692.19
1	PERMIT	Osceola Permit Submittal Service (This does not include the Actual Cost of the permit) *Actual jurisdictional receipts will be billed at cost.	$1,062.50	$1,062.50
1	TLRCD	Top Line Recreation Courtesy Discount	-$2,000.00	-$2,000.00

SUBTOTAL	$40,640.52
TAX RATE	0.0750
SALES TAX	$1,265.50
TOTAL	$41,906.02

Please contact me if I can be of further assistance.
DEBBIE LLOYD 407-579-1410

2922 Howland Blvd, Suite 3
Deltona, FL 32725
386-789-4508 / 888-909-0549 Fax
800-921-4509 Toll Free
info@toplinerec.com

Client:

General Terms:

Please note that this order is non-cancelable once placed, and deposit is non-refundable. If shipment is refused when delivery is attempted, carrier will return the shipment to the manufacturer and all resulting charges will be applied to your account.

Acceptance by either a signature or a purchase order based on this proposal indicates that you are in full agreement with all terms and conditions of this proposal including the following:

Prices are valid for 30 days. After 30 days, prices are subject to change without notice. Sales tax will be charged unless a copy of a valid Sales tax exemption certificate is presented with order. Specify all color selections in writing. Any discrepancies that arise due to oral color selections will be the responsibility of the customer. If customer is installing equipment, all equipment is to be installed per manufacturer's instructions and appropriate guidelines such as ASTM and CPSC.

Installation, site work, building permits, engineered drawings, etc. are not included unless noted.

Installation Terms:
Standard Services Include:
- Shipping Notification/Receiving Instructions
- Pre-Installation On-Site Meeting
- Underground Utility Check (Sunshine State One Call)
- Accept Delivery and Unload Equipment (If site is ready)
-Moving New Equipment to Job Site
- Layout of Equipment
- Installation of Equipment and Materials Per Manufacturer's Instructions
- Trash Clean Up (Dumpsters and Off-Site Trash Disposal not Standard)
- Post-Installation Walk Through
- Maintenance Explanation

Customer Responsibilities (Applicable if Top Line Recreation, Inc is NOT installing):

- Trash Disposal - Dumpsters or Off Site Disposal.
- Accept Delivery and Unload Equipment (If site is not ready.) $500.00 Charge will Apply if Customer Wants Installers to Unload.
- Provide Area for Storage and Staging.
- Secure Site and Equipment.
- Provide Access as Outlined below.

Some Optional Responsibilities (Must be clearly outlined in the applicable quotation/contract):
- Removal of Existing Equipment.
- Site Preparation and Grading, Drainage Systems, etc.
- Engineered Drawings for Purchased Equipment.
- Other Permits or Engineered Drawings (i.e. zoning permits, environmental permits, site surveys, etc.)

*Any other responsibilities must be clearly outlined in the applicable quotation/contract.

Building permits
Building permits are the responsibility of the owner. If a building permit is required for your project, there will be an administrative, expeditor, and application fee included on project quote. This fee does not include the cost of the actual permit. Customer will be charged "actual permit" cost on last invoice.

NOTE - All zoning, planning, environmental, etc. permits and approvals are the responsibility of others.

Other Notes:
Access/Utilities. Access must be provided to the installation area for heavy trucks and equipment. Access of equipment and personnel is the obligation of the customer to provide until the project is fully completed. We will take every precaution to avoid damage, however any damage caused by the normal installation of our product, such as sod, concrete sidewalks, private underground utilities, etc., will be the responsibility of the customer, as will any additional costs associated with limiting damage such as providing plywood over sod for access. If access is not reasonably close to the jobsite, any additional costs incurred due to having to transport materials and/or supplies will be the responsibility of the customer.
Rock/Foreign Object Clause. Most installations require digging of holes and footing equipment in concrete below finished grade. Removal of existing ground covers such as asphalt, concrete, tan bark, sand, pea gravel, wood fiber, rubber matting, poured-in-place rubber surfacing, or any other material that interferes or delays the digging of holes, is the responsibility of others, unless otherwise noted. If excessive underground obstructions such as rock, coral, asphalt, concrete, pipes, drainage systems, root systems, water, or any other unknown obstructions are discovered, charges will be added to the original proposal.

Playground Surfacing. All playground equipment is to be installed over safety surfacing per CPSC guidelines and ASTM standards. If the customer contracts for something contrary to the guidelines, they are accepting all responsibility for any liability and future litigation that may arise.

If a special inspection is required, an additional fee of $700.00 will be added to the final invoice.

Acceptance Signature _____ Date _____ P.O. # _____

Tax Exempt No._____

Hip Shade

Length	38'	**Width**	20'	**Entry Height**	11'
Peak Height	15.04'	**Elbow**	Glide	**Column Mount**	Embedded
Column Size	Ø5.5" Sch-40	**Rafter Size**	Ø5.0" 7-Ga	**Ridge Size**	Ø5.0" 7-Ga
Column Length	14'	**Rafter Length**	14.22'	**Ridge Length**	19.47'
Dome Qty.	1	**Column Qty.**	4		

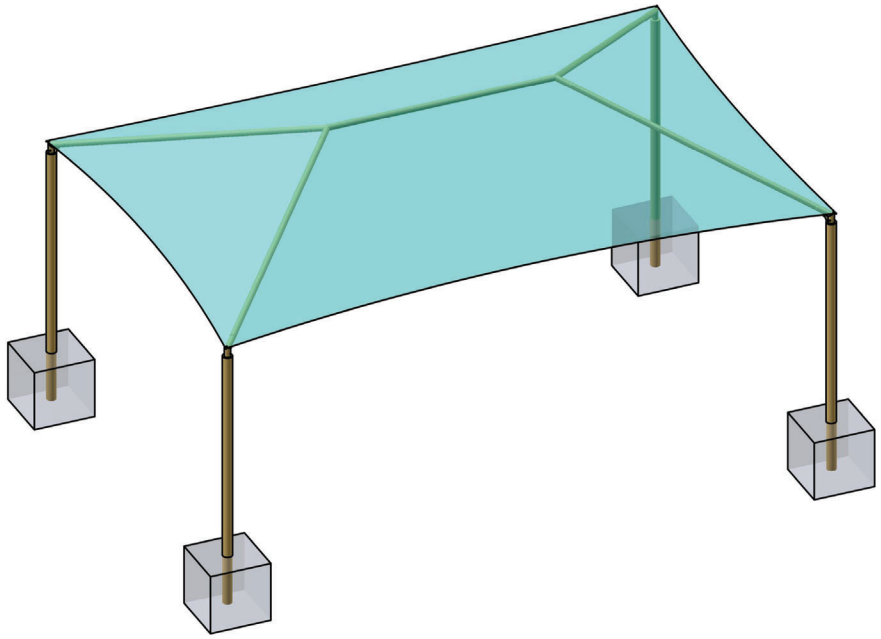

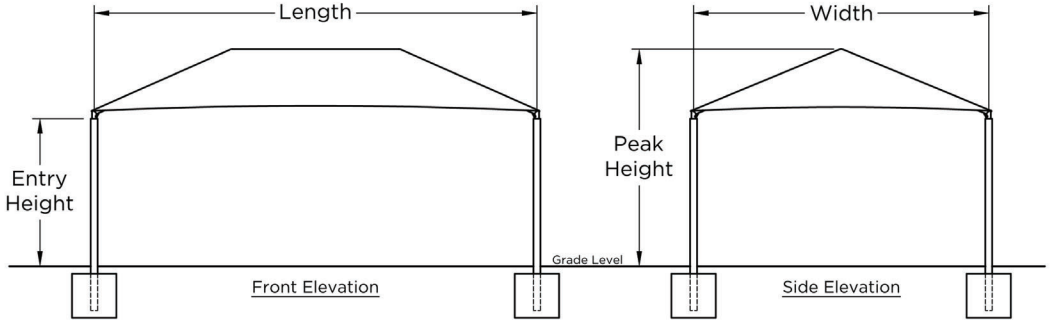

Square Footing		
Column	Length & Width	Depth
Single Cap	3.73	3
Double Cap	N/A	3

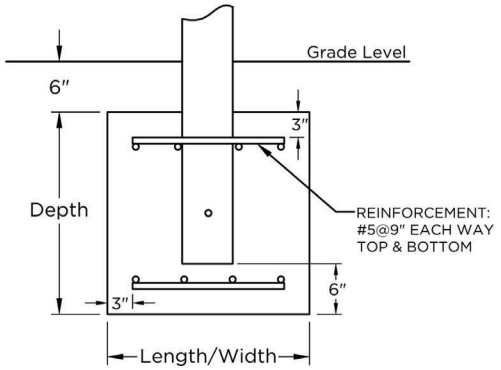

Auger Footing		
Diameter	Single Cap Depth	Double Cap Depth
1'-6"		
2'-0"	Out of range	N/A
2'-6"	Out of range	N/A
3'-0"	4.73	N/A

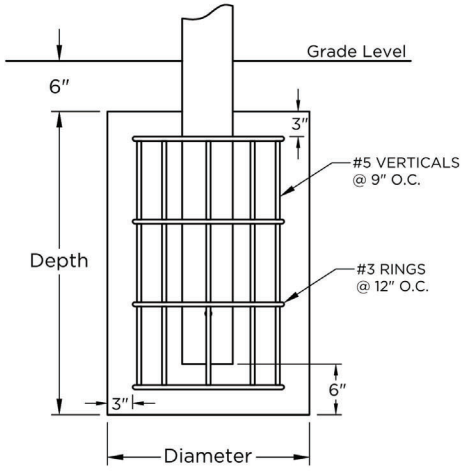

Superior Shade

QUOTE	SHADE SIZE	SHADE STYLE
	38 X 20	Hip Shade

These drawings are for reference only and should not be used as construction details. They show the general character and rough dimensions of the structural features. Exact spans, fasteners, materials, and foundations can be determined by a licensed professional engineer upon request. Estimated footing size above is based on 1,500 PSF soil bearing pressure.

QUOTE

QUOTE #	TLRQ5565-04
PROJECT NAME	Inlet Point

Top Line Recreation Inc.
2922 Howland Blvd, Suite 3, Deltona, FL 32725
386-575-8359

Bill to:
Jeffrey Webb
Celebration Residents Owners Association
851 Celebration Avenue
Celebration, FL 34747
863-604-0480
jeffrey.webb@townhall.celebration.fl.us

Ship to:
Jeffrey Webb
Celebration Residents Owners Association
Inlet Point
7417 Inlet Point
Celebration, FL 34747
863-604-0480
jeffrey.webb@townhall.celebration.fl.us

SALESPERSON	PAYMENT TERMS	QUOTE CREATED	QUOTE EXPIRES
Debbie Lloyd	NET 30	Apr 4, 2024	May 6, 2024

QTY	PART NUMBER	DESCRIPTION	UNIT PRICE	TOTAL PRICE
		Inlet Point 5-12 Play Quote 4		
1	SUP74573	Inlet Point Playground Climber 5-12 Superior 33’ x 33’ x 11’H Square with 4 Columns, stainless steel hardware and cables. Includes Elbow Glide. Anchor bolts to be supplied by manufacturer.	$20,925.33	$20,925.33
1	ENG1SUP	FL Engineer Sealed Drawings & Calculations	$1,250.00	$1,250.00
1	FREIGHT	Charges to Celebration, FL 34747	$1,412.50	$1,412.50
1	INSTALL	Buildworx Site Prep to rack back existing mulch prior to footer install not to contaminate. Installation includes Square 33’ x 33’ x 11’H - 4 post. Anchor bolts to be supplied by manufacturer. Footer dirt to be hauled away. Includes repair to any concrete playground borders due to placement of footers close to edge. Includes plywood to drive over to protect sidewalk.	$19,423.75	$19,423.75
1	LOCATES	Ground Hound underground penetrating radar	$1,062.50	$1,062.50
1	PERMIT	Osceola Permit Submittal Service (This does not include the Actual Cost of the permit) *Actual jurisdictional receipts will be billed at cost.	$1,062.50	$1,062.50
1	TLRCD	Top Line Recreation Courtesy Discount	-$2,300.00	-$2,300.00

SUBTOTAL	$42,836.58
TAX RATE	0.0750
SALES TAX	$1,569.40
TOTAL	$44,405.98

Please contact me if I can be of further assistance.
DEBBIE LLOYD 407-579-1410

2922 Howland Blvd, Suite 3
Deltona, FL 32725
386-789-4508 / 888-909-0549 Fax
800-921-4509 Toll Free
info@toplinerec.com

Client:

General Terms:

Please note that this order is non-cancelable once placed, and deposit is non-refundable. If shipment is refused when delivery is attempted, carrier will return the shipment to the manufacturer and all resulting charges will be applied to your account.

Acceptance by either a signature or a purchase order based on this proposal indicates that you are in full agreement with all terms and conditions of this proposal including the following:

Prices are valid for 30 days. After 30 days, prices are subject to change without notice. Sales tax will be charged unless a copy of a valid Sales tax exemption certificate is presented with order. Specify all color selections in writing. Any discrepancies that arise due to oral color selections will be the responsibility of the customer. If customer is installing equipment, all equipment is to be installed per manufacturer's instructions and appropriate guidelines such as ASTM and CPSC.

Installation, site work, building permits, engineered drawings, etc. are not included unless noted.

Installation Terms:
Standard Services Include:
- Shipping Notification/Receiving Instructions
- Pre-Installation On-Site Meeting
- Underground Utility Check (Sunshine State One Call)
- Accept Delivery and Unload Equipment (If site is ready)
-Moving New Equipment to Job Site
- Layout of Equipment
- Installation of Equipment and Materials Per Manufacturer's Instructions
- Trash Clean Up (Dumpsters and Off-Site Trash Disposal not Standard)
- Post-Installation Walk Through
- Maintenance Explanation

Customer Responsibilities (Applicable if Top Line Recreation, Inc is NOT installing):

- Trash Disposal - Dumpsters or Off Site Disposal.
- Accept Delivery and Unload Equipment (If site is not ready.) $500.00 Charge will Apply if Customer Wants Installers to Unload.
- Provide Area for Storage and Staging.
- Secure Site and Equipment.
- Provide Access as Outlined below.

Some Optional Responsibilities (Must be clearly outlined in the applicable quotation/contract):
- Removal of Existing Equipment.
- Site Preparation and Grading, Drainage Systems, etc.
- Engineered Drawings for Purchased Equipment.
- Other Permits or Engineered Drawings (i.e. zoning permits, environmental permits, site surveys, etc.)

*Any other responsibilities must be clearly outlined in the applicable quotation/contract.

Building permits
Building permits are the responsibility of the owner. If a building permit is required for your project, there will be an administrative, expeditor, and application fee included on project quote. This fee does not include the cost of the actual permit. Customer will be charged "actual permit" cost on last invoice.

NOTE - All zoning, planning, environmental, etc. permits and approvals are the responsibility of others.

Other Notes:
Access/Utilities. Access must be provided to the installation area for heavy trucks and equipment. Access of equipment and personnel is the obligation of the customer to provide until the project is fully completed. We will take every precaution to avoid damage, however any damage caused by the normal installation of our product, such as sod, concrete sidewalks, private underground utilities, etc., will be the responsibility of the customer, as will any additional costs associated with limiting damage such as providing plywood over sod for access. If access is not reasonably close to the jobsite, any additional costs incurred due to having to transport materials and/or supplies will be the responsibility of the customer.
Rock/Foreign Object Clause. Most installations require digging of holes and footing equipment in concrete below finished grade. Removal of existing ground covers such as asphalt, concrete, tan bark, sand, pea gravel, wood fiber, rubber matting, poured-in-place rubber surfacing, or any other material that interferes or delays the digging of holes, is the responsibility of others, unless otherwise noted. If excessive underground obstructions such as rock, coral, asphalt, concrete, pipes, drainage systems, root systems, water, or any other unknown obstructions are discovered, charges will be added to the original proposal.

Playground Surfacing. All playground equipment is to be installed over safety surfacing per CPSC guidelines and ASTM standards. If the customer contracts for something contrary to the guidelines, they are accepting all responsibility for any liability and future litigation that may arise.

If a special inspection is required, an additional fee of $700.00 will be added to the final invoice.

Acceptance Signature _____ Date _____ P.O. # _____

Tax Exempt No._____

Hip Shade

Length	33'	**Width**	33'	**Entry Height**	11'
Peak Height	17.11'	**Elbow**	Glide	**Column Mount**	Base Plate
Column Size	Ø6.6" Sch-40	**Rafter Size**	Ø5.0" 7-Ga	**Ridge Size**	Ø5.0" 7-Ga
Column Length	11.5'	**Rafter Length**	21.51'	**Ridge Length**	8.25'
Dome Qty.	1	**Column Qty.**	4		

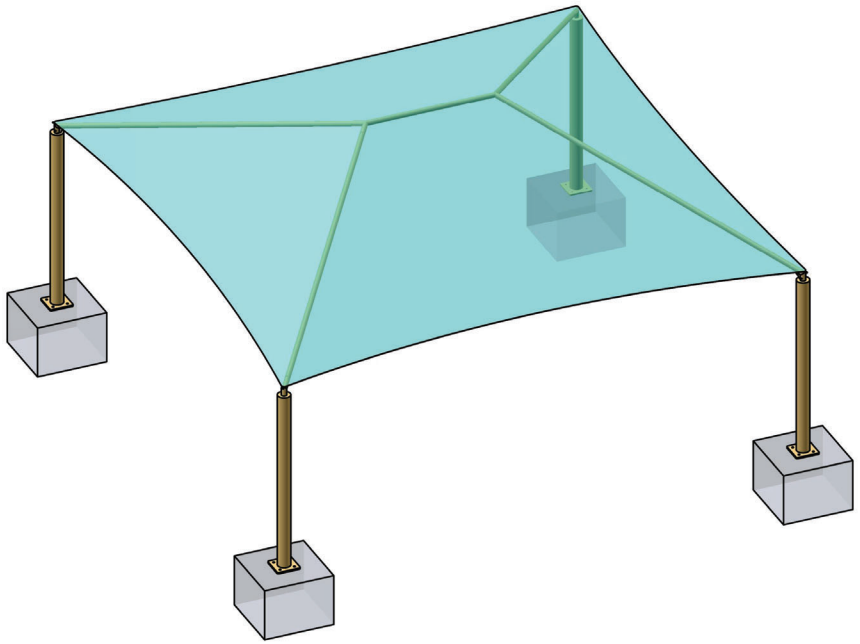

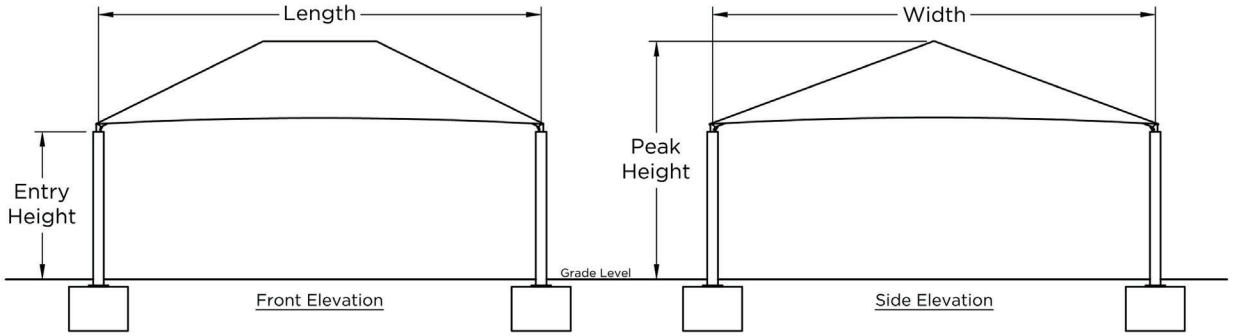

Square Footing		
Column	Length & Width	Depth
Single Cap	4.47	3
Double Cap	N/A	3

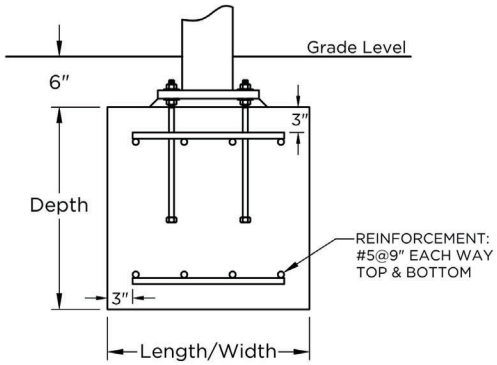

Auger Footing		
Diameter	Single Cap Depth	Double Cap Depth
1'-6"		
2'-0"	Out of range	N/A
2'-6"	Out of range	N/A
3'-0"	6.77	N/A

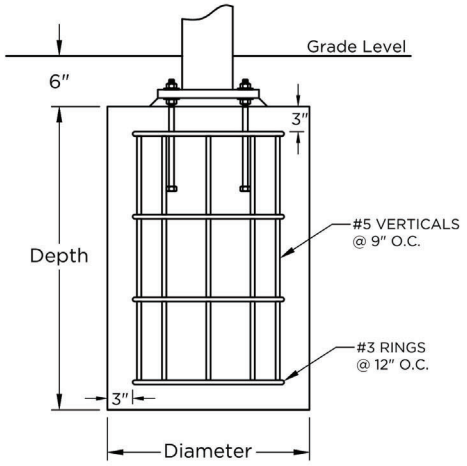

Superior Shade

QUOTE	SHADE SIZE	SHADE STYLE
	33 X 33	Hip Shade

These drawings are for reference only and should not be used as construction details. They show the general character and rough dimensions of the structural features. Exact spans, fasteners, materials, and foundations can be determined by a licensed professional engineer upon request. Estimated footing size above is based on 1,500 PSF soil bearing pressure.

Superior Shade

Shade Warranty

Superior Recreational Products (SRP) warrants that its product will be free from defects in materials and workmanship as well as maintain structural integrity for the periods listed below from the date of invoice and once SRP has been paid in full. This warranty is in effect only if the product has been assembled and installed strictly in accordance with the setup instructions provided by SRP, good construction practices, general maintenance and care is provided as per instructions in the customer packet, and has been subjected only to normal use and exposure. Product should be maintained per the instructions given at time of delivery.

- LW — **Lifetime* Warranty on stainless steel hardware**
- 20 — **20-Year Limited Warranty on framework**
- 10 — **10-Year Limited Warranty on fabric**
- 5 — **5-Year Limited Warranty on powder coat**
- 1 — **1-Year Limited Warranty on cables**
- 1 — **1-Year Limited Warranty on materials not above**

The Limited Warranty excludes abnormal conditions, contingent liability, cosmetic defects such as scratches, dents, marring, stripping, peeling, or fading; damage due to incorrect installation, vandalism, misuse, accident wear and tear from normal use; exposure to extreme weather, immersion in salt or chlorine water, damage due to sand, salt spray, or other abrasive and corrosive material; unauthorized repair or modification, abnormal use, or lack of maintenance. The warranty does not cover damages due to “acts of God” such as hail, flooding, lightning, tornadoes, sand storms, shifts of terrain, earthquakes, mudslides, and windstorms.

SRP does not warrant product for defects caused by erection, harsh site conditions, lack of maintenance, and/or other conditions beyond SRP’s control. SRP will not be held responsible for any materials that were not properly stored prior to installation. SRP reserves the right to void the limited warranty if it not installed per the installation instructions and/or unauthorized modifications.

In the unlikely event of failure, SRP reserves the right to alter the design, color, or contributing factors to rectify the condition and help prevent any future reoccurrence(s). SRP has the option to repair or replace any defect in materials.

The warranty is void if any changes, modifications, additions, or attachments are made to the product without the written consent of the manufacturer.

No signs, objects, ornaments, fans, lights, fixtures, or decorations may be hung from the structure unless specifically designed and engineered by the manufacturer or has manufacturers written approval.

SRP excludes any implied warranty of merchantability, fitness, or purpose, and there are no warranties which extend beyond the description of the face hereof. Under no circumstances will SRP be responsible for any indirect, special, consequential, incidental, or liquidated damages due to breach of warranty and such damages are specifically excluded from the warranty.

The owner shall notify SRP with original Sales Order Number issued from SRP to arrange for an inspection within 30 days after discovery of any defect under this warranty and before any alteration or repair is made or attempted. This Limited Warranty shall be null and void if the owner makes any alterations in design.

This warranty is the only express warranty given by the company. No person has authority to change or add to these obligations and liabilities. The company reserves the right to determine whether the fault is caused by faulty workmanship, material, or the part that is defective.

SRP will repair or replace at its discretion any defective part/s on an Ex-Works basis only. It is the responsibility of the customer to return the whole unit or the defective part/s at their own cost back to SRP for inspection along with proof of the date of purchase. SRP will not be liable for any costs incurred by the customer as a result of replacing the defective part/s, including but not limited to the costs of site visits and the labor costs involved with the removal and reinstallation of the whole unit or the defective part/s. Furthermore SRP will not be liable for any claimed compensation while the unit is not working or not present at the site whatsoever. This guarantee does not entitle the customer to a complete new product due to a defective component.

Limited Warranty: Structural Steel

SRP offers a 20-year Limited Warranty on structural steel frames for shade canopies against failure due to rust-through corrosion under normal environmental conditions. Should the fabric or parts need to be replaced under the warranty, SRP will manufacture and ship new replacement parts at no charge for the first ten years, thereafter pro-rated at 10% per annum over the last ten years.

Workmanship is warranted for a period of five years. This steel warranty shall be void if damage to the steel is caused by the installer or from physical damage, damage by salt spray or sprinkler systems, contact with chemicals, chlorine, pollution, misuse, vandalism, or any act of God.

Limited Warranty: Powder Coat

Superior Recreational Products offers a 5-year Limited Warranty for powder coating to the original purchaser. This Limited Warranty is for factory applied finish only. Damage occurring from shipping, erection, vandalism, accidents, or field modification is not covered in this limited warranty and will require field touch-up immediately and periodically thereafter. The owner must report any defect in powder coat at the time the installation is completed. Not covered by this Limited Warranty are acute angles, welds, and end plates.

The Limited Warranty for powder coating provides the following after a 5-year exposure period when applied according to the recommendations listed on the product's technical data sheet and appropriate surface preparation has been utilized.

- The coatings shall retain their original color with a ΔE of <7.5 units for high chroma colors (yellows, reds, oranges, etc.) and a ΔE of<5.0 units for low chroma colors, when tested in accordance with ASTM D 2244.
- The coating shall retain a minimum of 50% of its original gloss level after washing, when tested in accordance with ASTM D 523.
- The coating shall exhibit chalking no worse than numerical rating of 6, when evaluated in accordance with ASTM D 659-80.

Limited Warranty: Shade Fabric

Traditional shade fabric made with PTFE fiber that is high strength and low shrinkage and VALMEX® MEHATOP F 1 waterproof fabric carry a 10-year limited warranty. This warranties that the sewing thread used on the traditional shade fabric will be free from defects in material and workmanship and will not be damaged by exposure to sunlight, weather, and water. All other warranties are disclaimed.

SRP fabrics carry a 10-Year Limited Manufacturer's Warranty from the date of delivery against failure from significant fading**, deterioration, breakdown, outdoor heat, cold, or discoloration. Should the fabric need to be replaced under the warranty, SRP will manufacture and ship new fabric at no charge for the first six years, thereafter pro-rated at 18% per annum over the last four years. **The colors red and yellow are warranted against significant fading for only two years.

If the corners of the fabric are equipped with both holes in the fabric corner PLUS reinforcing straps, BOTH the strap and fabric hole must be placed over each corner hook or the fabric warranty is void.

Fabric curtains, valences, or flat vertical panels are not covered under the warranty.

Fabric is not warranted where it is installed on a structure that is not engineered and built by SRP or its agents.

This warranty shall be void if damage to or failure to the shade is caused by contact with chemicals, chlorine, bleaching agents, hydrocarbons or hydrocarbon containing solvents, misuse, vandalism, or any act of God, including but not limited to wind in excess of the wind limitations set forth below.

All fabric tops are warranted for sustained winds up to 76 mph (Hurricane Force 1) and for gusts of up to 3 seconds duration up to 90 mph. Removal of the shade fabric is required if damaging winds are called for. Damage due to snow and/or ice accumulation is not covered by this warranty. Canopies should be removed during the "off season."

These structures have been designed to eliminate any friction between the rafters and the fabric. The warranty will, therefore, be voided if any modification (temporary or permanent) is made to the rafter, cross pieces, or ridge beams, or if the fastening apparatus or canopy are not secured accordingly.

Structures are warranted for winds up to 90 or 105 mph only if shade canopies have been removed as per requirement set forth above in the fabric paragraph. Removal and re-installation must be performed by a qualified person or authorized dealer.

**For the purpose of this warranty, lifetime encompasses no specific term of years, but rather that seller warrants to its original customer for as long as the original customer owns the product and uses the product for its intended purpose that the product and all parts will be free from defects in materials and manufacturing workmanship. This warranty does not cover damage caused by vandalism, misuse or abuse, altered or modified parts, or cosmetic damage such as scratches, dents, or fading or weathering and normal wear and tear. This warranty is valid only if the structures are installed in conformity with instructions provided by Superior Recreational Products using approved Superior Recreational Products parts. Superior Recreational Products will deliver the repaired or replacement part or parts to the site free of charge, but will not be responsible for labor or the labor costs of replacement. Warranty claims must be filed within the applicable warranty period and accompanied by a sales order or invoice number.*

Policies

Pricing Policy

All prices are F.O.B. factor and do not include freight, installation, shipping and handling, surfacing, or applicable taxes. All prices listed were current at the time of printing and in U.S. currency. Prices are subject to change without notice.

Cancellation and Return Policy

To view our return policy, please visit superiorrecreationalproducts.com/returns. For information on Return Material Authorizations please call 1.800.327.8774.

Shipping Policy

To view our shipping policy, please visit superiorrecreationalproducts.com/shipping. For any further information please call 1.800.327.8774.

Appendix

Proper Care, Maintenance, and Safe Removal of the Shade Canopy

THINGS TO AVOID

SNOW, ICE, AND HIGH WINDS: Remove the canopy in winter conditions as ice and snow loads are not covered by the warranty. The same goes for winds in excess of hurricane force 1.

SHARP OBJECTS: Always avoid dragging the fabric across surfaces, etc. Roll or fold the fabric and carry it. Avoid sharp objects, bolts, snags, and other protrusions including mounting hardware.

OBSTRUCTIONS: Keep foliage, such as tree limbs, shrubbery, and bushes, trimmed back and away from fabric at least three to four feet.

SOURCES OF HEAT: Avoid contact with heat sources such as hot lights, torches, and avoid using grills, etc. under the fabric or fireworks near the fabric..

SLACK CABLE IN CANOPY: Canopies with loose cables can fail.

CLEANING THE FABRIC

The fabric itself is generally maintenance free with the exception of necessary removal due to weather or seasonal requirements. The fabric does not harbor mildew or mold, but residues such as tree sap, leaves, bird droppings, dust and dirt may need to be removed. To clean the fabric, use water and mild soap. A soft mop or soft broom may also be used. Cleaners that do not contain hydrocarbons, solvents, bleach or ammonia may be used. Use of solvents, hydrocarbons, bleach, and ammonia type cleaners will void the fabric warranty. A pressure washer may be used if necessary using a wide-spray nozzle.

CABLES AND HARDWARE

It is recommended that the cables be replaced every 3 to 4 years or if corrosion is visible, whichever comes first. Canopy cables that are not maintained at optimum tension will be subject to shorter lifespans and potential failures earlier than our recommend cable replacement scheduling. The cable ends must be wrapped with tape to secure any wires; thus, preventing the wires from tearing the fabric. Taping must be done when removing old cable as well as when installing new cable. Clamps should be replaced when the cable is replaced. If the cable appears slack on a still day (no wind), immediately have the cable and clamps re-tightened by a qualified person. The cable should not be slack.

GLIDE ELBOW™

Lubricate Glide Elbows™ annually and before operating. A waterproof grease is recommended such as a lithium-based grease or anti-seize thread lubricant.

STORAGE

Fabric must be stored in a clean, dry place free from snags, sharp edges, etcetera. The storage area must be rodent-free. Wrap all hardware fittings with rags or some other protector, as they can damage the fabric.

UNINSTALLING THE SHADE CANOPY

NECESSARY CARE: It is important to take necessary care when handling the fabric during removal and installation to prevent damage to the fabric as well as SAFE control of the fabric in a breeze or wind. The fabric is tough and engineered for use as a shade, but it can tear or cut when or if pulled over a snag or sharp item; it can puncture from bolts or other protruding objects; and it can melt from objects such as like cigarettes, matches, hot torch tips, sparks and the like. In addition, care must be exercised to avoid the fabric hooks after the fabric is unhooked from the elbow corners and sides of the structure where there are intermediate supports. It is best to wrap any connected mounting hardware to prevent it from harming the fabric.

PROPER AND SAFE: Based on the size of the canopy, several persons may be needed to properly and safely handle the fabric during the uninstalling process. You will need several commercial ladders or other means to work safely at heights such as scissor lifts, etc. It is advised that you pad the post side of the ladder and tie the ladder to the post. The pad is to protect the post finish. Also keep in mind that every 100 square feet of fabric (10' X 10') weighs approximately five pounds; a large canopy can get heavy fast. For proper control of the fabric, read below. It is best to remove the fabric on a still day. Do not attempt to remove the canopy in strong or gusty winds.

REMOVAL OF THE CANOPY: Do not attempt to remove the canopy in strong or gusty winds.

STANDARD ELBOWS: For shade structures with Standard Elbows, loosen the turnbuckle several turns in order to put enough slack in the cable to allow the fabric and cable to unhook from all the elbow hooks. Attach 3/8" or larger ropes to each corner of the fabric and cable before unhooking to secure and properly control the fabric from ground level. If uninstalling in breezy conditions, choose the windy side of the fabric and tie these corners to the posts with the ropes with enough slack to allow for unhooking the fabric from the structure. These ropes are to prevent the shade from flying away in the breeze and to help prevent injury to ground personnel. Once the corners have been secured to the posts, unhook the fabric and cables from each corner.

On the side away from the wind, release the corners of the fabric and cable and have a person hold on to each rope. It may help to wrap the rope around a column to help hold it from getting caught in the wind. Fold the fabric back away from the hooks. Now it will be necessary to remove the cable clamps to allow the cable to be free from the structure and the turnbuckle. If the cable ends are frayed, wrap them with tape. It is usually not necessary nor is it recommended that the cable be removed from the canopy. With a person on each rope, starting at the windy side, gently pull the canopy down in between the framework of the structure. The side away from the wind can be guided with the ropes toward the persons pulling the canopy down.
It is important when reinstalling the canopy, that it is put back in its original orientation to the structure. Starting at the turnbuckle corner, the fabric and cable corners should be returned to their original positions.

GLIDE ELBOWS: For shade structures with Glide Elbows, remove the protective covers from the ends of the glide elbows. Then, using the proper wrench, turn the hex nuts on the end of the Glide Elbow to run the glide hooks to their top most position. Do no loosen the cable clamps, leave the cable intact. Attach 3/8" ropes to each corner of the fabric and cable before unhooking to secure and properly control the fabric from ground level. If uninstalling in breezy conditions, choose the windy side of the fabric and tie these corners to the posts with the ropes with enough slack to allow for unhooking the fabric from the structure. These ropes are to prevent the shade from flying away in the wind and to help prevent injury to ground personnel. Once the corners have been secured to the posts, unhook the fabric and cables. On the side away from the wind, release the corners of the fabric and cable and have a person hold on to each rope. Fold the fabric back away from the hooks. It is a good idea to put the Glide Elbow protective covers back in place. With Glide Elbow installations it is not necessary to loosen or remove the cable clamps nor to remove the cable from the canopy. If the cable ends are frayed, wrap them with tape.
When uninstalling the canopy, mark or identify the corner of origin in such a way that when reinstalling the canopy, it is put back in its original orientation to the structure. The fabric and cable corners should be returned to their original positions when reinstalling the canopy. The cable and fabric should tighten properly when the glide elbows are adjusted down into their tension positions.

SHADE SAILS WITH FANS: For shade sails equipped with fans, loosen the adjustable threaded rod several turns in order to put enough slack in the cable to allow the shackle pin to be removed (do not remove the pins until the fabric corners have been secured with ropes). Attach 3/8" or larger ropes to each corner of the fabric and fan before unhooking to secure and properly control the fabric from ground level. If uninstalling in breezy conditions, choose the windy side of the fabric and tie these corners to the posts with the ropes with enough slack to allow for unhooking the shackle from the structure. These ropes are to prevent the shade from flying away in the breeze and to help prevent injury to ground personnel. Once the corners have been secured to the posts, unhook the shackles and lower the fabric and cable to the ground.

REINSTALLING HINTS

Using the same rope technique, install from the windy side (if it is breezy) making sure to secure these ropes to the posts. Then, throw the remaining corner ropes over the structure and gently pull the canopy into position. The cables and fabric corners can now be fastened on the hooks (and cable guides if so equipped). Next reinstall the clamps if applicable and tightened the cable with the turnbuckle or the Glide Elbows. Do not attempt to install the canopy in strong or gusty winds.

Material Specifications, Warranty, and Policies

Material Specifications

Fabric

- Shade fabric is made of UV stabilized cloth manufactured by Alnet Americas or approved equal
- The high density polyethylene material shall be manufactured with tensioned fabric structures in mind
- The fabric knit is to be made using monofilament and tape filler which has a weight of 9.38 to 10.32 oz. sq. yd. Material to be Rachel-knitted to ensure material will not unravel if cut
- Cloth meets fire resistance tests as follows:

  Alnet Americas Extra Block: California State Fire Marshall Reg. #F-93501

  Others: NFPA 701-99 (Test Method 2) and ASTM E-84

Fabric Properties

Stretch	Stentored
Tear Tests (lbs/ft)	WARP 44.8 WEFT 44
Burst Tests (lbs ft)	828 lbf (ASTM 3786)
Fabric Weight (oz/sqFT)	Avg 1.02 to 1.07 oz.
Fabric Width	9′ 10″
Roll Length	150′
Roll Size	63″ x 16 ½″
Weight	120 lbs.
Life Expectancy	10 Years
Fading	Minimum Fading After 6 years, 3 Years for Red and Yellow
Min. Temperature	-77˚
Max. Temperature	+167˚

Shade Protection and UV Screen Protection Factors

Color	Shade Cover	UVR Block Out
True Blue	93%	89%
Beige	97%	87%
Forest Green	96%	94%
Sun Blaze	94%	91%
Silver	95%	93%
Rivergum Green	88.7%	92.9%
Sky Blue	89%	92.2%
Navy Blue	93.6%	94.4%
Turquoise	86%	91.5%
Yellow	77.6%	95.5%

To view a complete list of fabrics, please reference the Color Options page of our catalog by clicking here.

Thread

- Shall be 100% expanded PTFE fiber that is high strength and low shrinkage
- Shall have a wide temperature and humidity range
- Abrasion resistant and UV radiation immunity
- Shall be unaffected by non-hydrocarbon based cleaning agents, acid rain, mildew, chlorine, saltwater, and pollution
- Lockstitch thread – 1200 Denier or equal
- Chain stitch thread – 2400 Denier or equal

Steel Tubing

- All fabricated steel must be in accordance with approved shop drawings and calculations
- All steel is cleaned, degreased, or etched to ensure proper adhesion of Superdurable powder coat in accordance with manufacturer's specifications
- All Steel used on this project needs to be new and accompanied by the mill certificates if requested. Structural steel tubing up to 5"-7 gauge shall be galvanized per Allied Steel FLO-COAT specifications. Schedule 40 black pipe fabrications shall be sand-blasted and primed as described below
- All non-hollow structural shapes comply with ASTM A-36, unless otherwise noted
- All hollow structural steel shapes shall be cold formed HSS ASTM A-53 grade C, unless otherwise noted
- Plate products shall comply with ASTM A-36

Superdurable Powder Coat and Primer

- All non-galvanized steel shade to be sand-blasted and primed prior to Superdurable powder coating using reclaimable blast media in a mixture of GL50 & GL80 Steel Grit
- All non-galvanized steel must be coated with rust inhibiting primer prior to applying the Superdurable powder coat. Primer shall be Marine Grade Cardinal Industrial Finishes Corp. E396–GR1372 epoxy Superdurable powder coating semi-gloss smooth zinc rich primer
- Welds shall be primed with rust inhibiting primer prior to applying the Superdurable powder coat. Primer shall be Marine Grade Cardinal Industrial Finishes Corp E396-GR1372 epoxy Superdurable powder coating semi-gloss smooth zinc rich primer
- All steel parts shall be coated for rust protection and finished with a minimum 3.5 mil thick UV-inhibited weather resistant Superdurable powder coating

Powder Coat Tests		Results
ASTM	Gloss at 60˚	85-95
HOI TM 10.219	PCI Powder Smoothness	7
ASTM D2454-91	Over-Bake Resistance Time	200%
ASTM D3363-92A	Pencil Hardness	H-2H
ASTM D2794-93	Dir/Rev Impact, Gardner	140/140 in/lbs
ASTM D3359-95B	Adhesion, Cross Hatch	5B Pass
ASTM D522-93A	Flexibility Mandrel	¼" dia. No fracture
ASTM B117-95	Salt Spray	1,000 hours
UL DtOV2	Organic Coating Steel Enclosures, Elect Eq.	Recognized

Powder Coat Process Characteristics

N.3.1	Specific Gravity	1.68+/-0.05
N.3.2	Theoretical Coverage	114+/- 4 ft 2/lb/mil
N.3.3	Mass Loss During Cure	<1%
N.3.4	Maximum Storage Temperature	75˚ F

Application Criteria

N.5.1	Electrostatic Spray Cold	Substrate:0.032 in. CRS
N.5.2	Cure Schedule	10 minutes at 400˚ F
N.5.3	Pretreatment	Bonderite 1000
N.5.4	Film Thickness	3.5 Mils

Welds

- All shop welds shall be executed in accordance with the latest edition of the American Welding Society Specifications
- Welding procedures shall comply in accordance with the AWS D1.1-AWS Structural Welding Code-Steel
- All welds to be performed by a certified welder. All welds shall be continuous where length is not given, unless otherwise shown or noted on drawings
- All welds shall develop the full strength of the weaker member. All welds shall be made using E70xx.035 wire
- Shop connections shall be welded unless noted otherwise. Field connections shall be indicated on the drawings. Field welded connections are not acceptable
- All fillet welds shall be a minimum of ¼" unless otherwise noted
- All steel shall be welded shut at terminations to prevent internal leakage
- Internal weld sleeving is not acceptable
- On-site welding of any component is not acceptable

Sewing

- On-site sewing of a fabric will not be accepted
- All corners shall be reinforced with extra non-tear cloth and strap to distribute the load
- The perimeters that contain the cables shall be double lock stitched

Installation Hardware

- Bolt and fastening hardware shall be determined based on calculated engineering loads
- All bolts shall comply with SAE-J429 (Grade 8) or ASTM A325 (Grade BD). All nuts shall comply with ASTM F-594, alloy Group 1 or 2
- Upon request, Stainless Steel hardware shall comply with ASTM A-304
- 1/4" galvanized wire rope shall be 7x19 strand with a breaking strength of 7,000 lbs. for shades generally under 575 sq. ft. unless requested larger by the customer. For shades over 575 sq. ft., cable shall be 5/16" with a breaking strength of 9,800 lbs. Upon request, 1/4" Stainless Steel wire rope shall be 7x19 strand with a breaking strength of 6,400 lbs. 5/16" Stainless Steel wire rope shall be 7/19 strand with a breaking strength of 9,000 lbs.
- All fittings required for proper securing of the cable are hot dipped galvanized

Concrete

- Concrete work shall be executed in accordance with the latest edition of American Concrete Building Code ACI 318 unless specified by the governing municipality
- Concrete specifications shall comply in accordance with, and detailed as, per plans as follows:

    1. 28 Days Strength F'c = 2500 psi
    2. Aggregate: HR
    3. Slump: 3-5
    4. Portland Cement shall conform to C-150

CONCRETE CONTINUED ON NEXT PAGE

5. Aggregate shall conform to ASTM C-33

- All reinforcement shall conform to ASTM A-615 grade 60
- Reinforcing steel shall be detailed, fabricated and placed in accordance with the latest ACI Detailing Manual and manual of Standard Practice
- Whenever daily ambient temperatures are below 80˚ F, the contractor may have mix accelerators and hot water added at the batch plant (see table)
- The contractor shall not pour any concrete when daily ambient temperature is below 55˚ F

Concrete Temperate Chart

Temperature Range	% Accelerator	Type Accelerator
75-80˚	1%	High Early (non calcium)
70-75˚	2%	High Early (non calcium)
Below 70˚	3%	High Early (non calcium)

Footings

- All anchor bolts set in new concrete shall be ASTM A-307, or ASTM F-1554 if specified by engineer
- All anchor bolts shall be zinc plated unless specified otherwise
- Footing shall be placed in accordance with and conform to engineered specifications and drawings

Superior Shade

Color Options

Frames

Backed by a 5-year limited warranty.

Gloss

- Red
- Orange
- Butterscotch
- Yellow
- NEW! Ice Butter (CS)
- Spring Green
- NEW! Ice Mint (CS)
- Chartreuse
- Green
- Sage
- Blue
- Periwinkle
- Royal Purple
- Burgundy
- Beige
- Vanilla
- Brown
- Black
- White

Matte, Textured & Metallic

- NEW! Sea Mist (CS)
- NEW! Azure (CS)
- NEW! Ocean (CS)
- Sky Blue
- Champagne
- Metallic
- Bronze
- Starlight

Waterproof Shade Fabric

For our Arched Cantilever, Flower, and Single Post and Cantilever Waterproof Umbrellas. Backed by a 10-year limited warranty.

Tan White

Traditional Fabric

This selection of fabric options includes colors that are California Fire Marshal certified and pass the NFPA 701 or ASTM E84 tests. Select color options are noted as flame retardant. Backed by a 10-year limited warranty.

Natural, Beige, Latte, Desert Sand, Cedar
Brown, Cayenne, Sun Blaze, Yellow, Royal Purple
Sky Blue, Dove Blue, True Blue, Aquatic Blue, Navy Blue
Turquoise, Lime, Mint Green, Forest Green, Brunswick Green
Rivergum, Midnight, Silver, Steel Gray, Pearl Onyx

Dual Shade Fabric

Available for an upcharge for our Hypar Umbrella, Triangle Sail, and Hyperbolic Sail. Backed by a 10-year limited warranty.

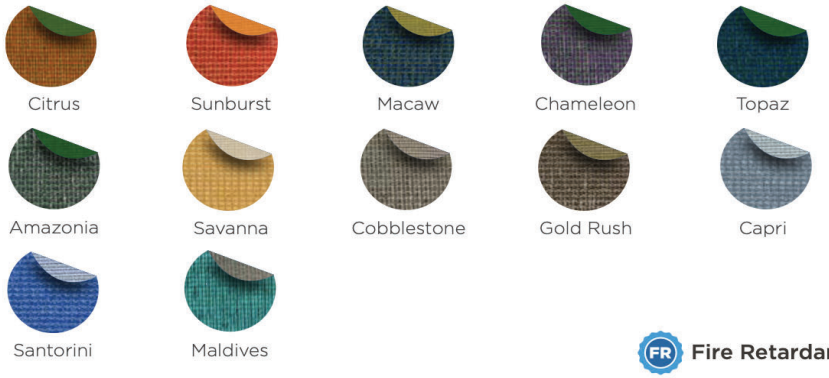

Citrus, Sunburst, Macaw, Chameleon, Topaz
Amazonia, Savanna, Cobblestone, Gold Rush, Capri
Santorini, Maldives

(FR) Fire Retardant

(CS) Color Coming Soon! Ask your representative about availability.

Complete Your Space

When combined, Superior Recreational Products' product lines create complete site environments. Design your space using one superior company. **Visit srpshade.com, srpplayground.com, and srpsiteamenities.com to learn more.**

Hanging Cantilever Hip Shade

Length	18'	**Width**	17'	**Entry Height**	8'
Peak Height	11.15'	**Elbow**	Standard	**Column Mount**	Base Plate
Column Size	8"x6"x1/4"	**Rafter Size**	Ø2.875" 12-Ga	**Ridge Size**	Ø2.875" 12-Ga
Column Length	9.5'	**Rafter Length**	11.08'	**Ridge Length**	5.25'
Dome Qty.	1	**Column Qty.**	2	**Beam Size**	6"x4"x1/4"

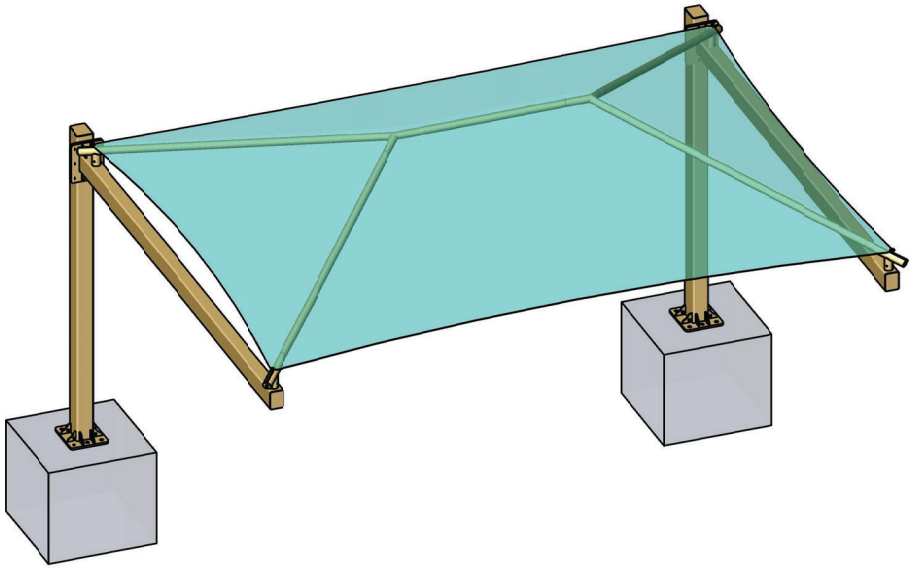

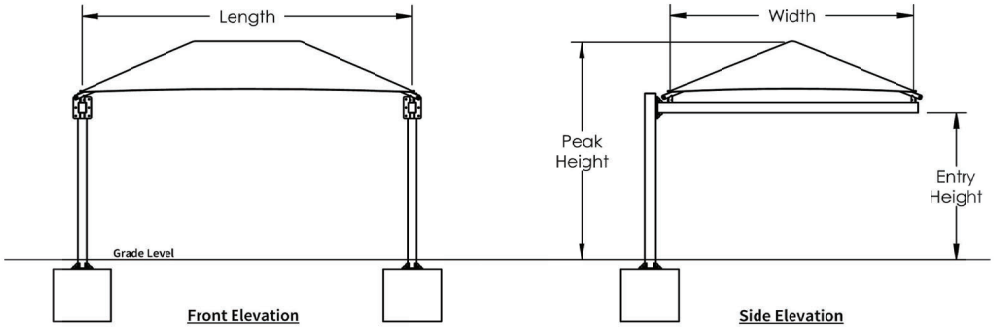

Square Footing		
Column	Length & Width	Depth
Single Cap	3.57	3
Double Cap	N/A	3

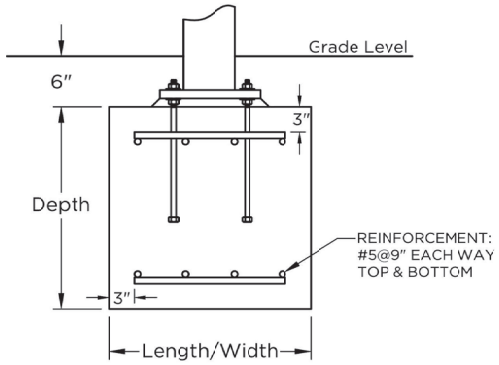

Auger Footing		
Diameter	Single Cap Depth	Double Cap Depth
1'-5"		
2'-0"	Out of range	N/A
2'-6"	Out of range	N/A
3'-0"	4.33	N/A

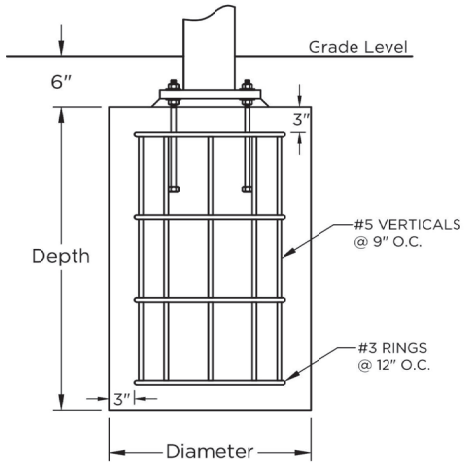

Superior Shade

QUOTE	SHADE SIZE	SHADE STYLE
	18 X 17	**Hanging Cantilever Hip Shade**

These drawings are for reference only and should not be used as construction details. They show the general character and rough dimensions of the structural features. Exact spans, fasteners, materials, and foundations can be determined by a licensed professional engineer upon request. Estimated footing size above is based on 1,500 PSF soil bearing pressure.

Superior Shade

Shade Warranty

Superior Recreational Products (SRP) warrants that its product will be free from defects in materials and workmanship as well as maintain structural integrity for the periods listed below from the date of invoice and once SRP has been paid in full. This warranty is in effect only if the product has been assembled and installed strictly in accordance with the setup instructions provided by SRP, good construction practices, general maintenance and care is provided as per instructions in the customer packet, and has been subjected only to normal use and exposure. Product should be maintained per the instructions given at time of delivery.

- LW — **Lifetime* Warranty on stainless steel hardware**
- 20 — **20-Year Limited Warranty on framework**
- 10 — **10-Year Limited Warranty on fabric**
- 5 — **5-Year Limited Warranty on powder coat**
- 1 — **1-Year Limited Warranty on cables**
- 1 — **1-Year Limited Warranty on materials not above**

The Limited Warranty excludes abnormal conditions, contingent liability, cosmetic defects such as scratches, dents, marring, stripping, peeling, or fading; damage due to incorrect installation, vandalism, misuse, accident wear and tear from normal use; exposure to extreme weather, immersion in salt or chlorine water, damage due to sand, salt spray, or other abrasive and corrosive material; unauthorized repair or modification, abnormal use, or lack of maintenance. The warranty does not cover damages due to "acts of God" such as hail, flooding, lightning, tornadoes, sand storms, shifts of terrain, earthquakes, mudslides, and windstorms.

SRP does not warrant product for defects caused by erection, harsh site conditions, lack of maintenance, and/or other conditions beyond SRP's control. SRP will not be held responsible for any materials that were not properly stored prior to installation. SRP reserves the right to void the limited warranty if it not installed per the installation instructions and/or unauthorized modifications.

In the unlikely event of failure. SRP reserves the right to alter the design, color, or contributing factors to rectify the condition and help prevent any future reoccurrence(s). SRP has the option to repair or replace any defect in materials.

The warranty is void if any changes, modifications, additions, or attachments are made to the product without the written consent of the manufacturer.

No signs, objects, ornaments, fans, lights, fixtures, or decorations may be hung from the structure unless specifically designed and engineered by the manufacturer or has manufacturers written approval.

SRP excludes any implied warranty of merchantability, fitness, or purpose, and there are no warranties which extend beyond the description of the face hereof. Under no circumstances will SRP be responsible for any indirect, special, consequential, incidental, or liquidated damages due to breach of warranty and such damages are specifically excluded from the warranty.

The owner shall notify SRP with original Sales Order Number issued from SRP to arrange for an inspection within 30 days after discovery of any defect under this warranty and before any alteration or repair is made or attempted. This Limited Warranty shall be null and void if the owner makes any alterations in design.

This warranty is the only express warranty given by the company. No person has authority to change or add to these obligations and liabilities. The company reserves the right to determine whether the fault is caused by faulty workmanship, material, or the part that is defective.

SRP will repair or replace at its discretion any defective part/s on an Ex-Works basis only. It is the responsibility of the customer to return the whole unit or the defective part/s at their own cost back to SRP for inspection along with proof of the date of purchase. SRP will not be liable for any costs incurred by the customer as a result of replacing the defective part/s, including but not limited to the costs of site visits and the labor costs involved with the removal and reinstallation of the whole unit or the defective part/s. Furthermore SRP will not be liable for any claimed compensation while the unit is not working or not present at the site whatsoever. This guarantee does not entitle the customer to a complete new product due to a defective component.

Limited Warranty: Structural Steel

SRP offers a 20-year Limited Warranty on structural steel frames for shade canopies against failure due to rust-through corrosion under normal environmental conditions. Should the fabric or parts need to be replaced under the warranty, SRP will manufacture and ship new replacement parts at no charge for the first ten years, thereafter pro-rated at 10% per annum over the last ten years.

Workmanship is warranted for a period of five years. This steel warranty shall be void if damage to the steel is caused by the installer or from physical damage, damage by salt spray or sprinkler systems, contact with chemicals, chlorine, pollution, misuse, vandalism, or any act of God.

Limited Warranty: Powder Coat

Superior Recreational Products offers a 5-year Limited Warranty for powder coating to the original purchaser. This Limited Warranty is for factory applied finish only. Damage occurring from shipping, erection, vandalism, accidents, or field modification is not covered in this limited warranty and will require field touch-up immediately and periodically thereafter. The owner must report any defect in powder coat at the time the installation is completed. Not covered by this Limited Warranty are acute angles, welds, and end plates.

The Limited Warranty for powder coating provides the following after a 5-year exposure period when applied according to the recommendations listed on the product's technical data sheet and appropriate surface preparation has been utilized.

- The coatings shall retain their original color with a ΔE of <7.5 units for high chroma colors (yellows, reds, oranges, etc.) and a ΔE of<5.0 units for low chroma colors, when tested in accordance with ASTM D 2244.
- The coating shall retain a minimum of 50% of its original gloss level after washing, when tested in accordance with ASTM D 523.
- The coating shall exhibit chalking no worse than numerical rating of 6, when evaluated in accordance with ASTM D 659-80.

Limited Warranty: Shade Fabric

Traditional shade fabric made with PTFE fiber that is high strength and low shrinkage and VALMEX® MEHATOP F 1 waterproof fabric carry a 10-year limited warranty. This warranties that the sewing thread used on the traditional shade fabric will be free from defects in material and workmanship and will not be damaged by exposure to sunlight, weather, and water. All other warranties are disclaimed.

SRP fabrics carry a 10-Year Limited Manufacturer's Warranty from the date of delivery against failure from significant fading**, deterioration, breakdown, outdoor heat, cold, or discoloration. Should the fabric need to be replaced under the warranty, SRP will manufacture and ship new fabric at no charge for the first six years, thereafter pro-rated at 18% per annum over the last four years. **The colors red and yellow are warranted against significant fading for only two years.

If the corners of the fabric are equipped with both holes in the fabric corner PLUS reinforcing straps, BOTH the strap and fabric hole must be placed over each corner hook or the fabric warranty is void.

Fabric curtains, valences, or flat vertical panels are not covered under the warranty.

Fabric is not warranted where it is installed on a structure that is not engineered and built by SRP or its agents.

This warranty shall be void if damage to or failure to the shade is caused by contact with chemicals, chlorine, bleaching agents, hydrocarbons or hydrocarbon containing solvents, misuse, vandalism, or any act of God, including but not limited to wind in excess of the wind limitations set forth below.

All fabric tops are warranted for sustained winds up to 76 mph (Hurricane Force 1) and for gusts of up to 3 seconds duration up to 90 mph. Removal of the shade fabric is required if damaging winds are called for. Damage due to snow and/or ice accumulation is not covered by this warranty. Canopies should be removed during the "off season."

These structures have been designed to eliminate any friction between the rafters and the fabric. The warranty will, therefore, be voided if any modification (temporary or permanent) is made to the rafter, cross pieces, or ridge beams, or if the fastening apparatus or canopy are not secured accordingly.

Structures are warranted for winds up to 90 or 105 mph only if shade canopies have been removed as per requirement set forth above in the fabric paragraph. Removal and re-installation must be performed by a qualified person or authorized dealer.

**For the purpose of this warranty, lifetime encompasses no specific term of years, but rather that seller warrants to its original customer for as long as the original customer owns the product and uses the product for its intended purpose that the product and all parts will be free from defects in materials and manufacturing workmanship. This warranty does not cover damage caused by vandalism, misuse or abuse, altered or modified parts, or cosmetic damage such as scratches, dents, or fading or weathering and normal wear and tear. This warranty is valid only if the structures are installed in conformity with instructions provided by Superior Recreational Products using approved Superior Recreational Products parts. Superior Recreational Products will deliver the repaired or replacement part or parts to the site free of charge, but will not be responsible for labor or the labor costs of replacement. Warranty claims must be filed within the applicable warranty period and accompanied by a sales order or invoice number.*

Policies

Pricing Policy

All prices are F.O.B. factor and do not include freight, installation, shipping and handling, surfacing, or applicable taxes. All prices listed were current at the time of printing and in U.S. currency. Prices are subject to change without notice.

Cancellation and Return Policy

To view our return policy, please visit superiorrecreationalproducts.com/returns. For information on Return Material Authorizations please call 1.800.327.8774.

Shipping Policy

To view our shipping policy, please visit superiorrecreationalproducts.com/shipping. For any further information please call 1.800.327.8774.

Appendix

Proper Care, Maintenance, and Safe Removal of the Shade Canopy

THINGS TO AVOID

SNOW, ICE, AND HIGH WINDS: Remove the canopy in winter conditions as ice and snow loads are not covered by the warranty. The same goes for winds in excess of hurricane force 1.

SHARP OBJECTS: Always avoid dragging the fabric across surfaces, etc. Roll or fold the fabric and carry it. Avoid sharp objects, bolts, snags, and other protrusions including mounting hardware.

OBSTRUCTIONS: Keep foliage, such as tree limbs, shrubbery, and bushes, trimmed back and away from fabric at least three to four feet.

SOURCES OF HEAT: Avoid contact with heat sources such as hot lights, torches, and avoid using grills, etc. under the fabric or fireworks near the fabric..

SLACK CABLE IN CANOPY: Canopies with loose cables can fail.

CLEANING THE FABRIC

The fabric itself is generally maintenance free with the exception of necessary removal due to weather or seasonal requirements. The fabric does not harbor mildew or mold, but residues such as tree sap, leaves, bird droppings, dust and dirt may need to be removed. To clean the fabric, use water and mild soap. A soft mop or soft broom may also be used. Cleaners that do not contain hydrocarbons, solvents, bleach or ammonia may be used. Use of solvents, hydrocarbons, bleach, and ammonia type cleaners will void the fabric warranty. A pressure washer may be used if necessary using a wide-spray nozzle.

CABLES AND HARDWARE

It is recommended that the cables be replaced every 3 to 4 years or if corrosion is visible, whichever comes first. Canopy cables that are not maintained at optimum tension will be subject to shorter lifespans and potential failures earlier than our recommend cable replacement scheduling. The cable ends must be wrapped with tape to secure any wires; thus, preventing the wires from tearing the fabric. Taping must be done when removing old cable as well as when installing new cable. Clamps should be replaced when the cable is replaced. If the cable appears slack on a still day (no wind), immediately have the cable and clamps re-tightened by a qualified person. The cable should not be slack.

GLIDE ELBOW™

Lubricate Glide Elbows™ annually and before operating. A waterproof grease is recommended such as a lithium-based grease or anti seize thread lubricant.

STORAGE

Fabric must be stored in a clean, dry place free from snags, sharp edges, etcetera. The storage area must be rodent-free. Wrap all hardware fittings with rags or some other protector, as they can damage the fabric.

UNINSTALLING THE SHADE CANOPY

NECESSARY CARE: It is important to take necessary care when handling the fabric during removal and installation to prevent damage to the fabric as well as SAFE control of the fabric in a breeze or wind. The fabric is tough and engineered for use as a shade, but it can tear or cut when or if pulled over a snag or sharp item; it can puncture from bolts or other protruding objects; and it can melt from objects such as like cigarettes, matches, hot torch tips, sparks and the like. In addition, care must be exercised to avoid the fabric hooks after the fabric is unhooked from the elbow corners and sides of the structure where there are intermediate supports. It is best to wrap any connected mounting hardware to prevent it from harming the fabric.

PROPER AND SAFE: Based on the size of the canopy, several persons may be needed to properly and safely handle the fabric during the uninstalling process. You will need several commercial ladders or other means to work safely at heights such as scissor lifts, etc. It is advised that you pad the post side of the ladder and tie the ladder to the post. The pad is to protect the post finish. Also keep in mind that every 100 square feet of fabric (10' X 10') weighs approximately five pounds; a large canopy can get heavy fast. For proper control of the fabric, read below. It is best to remove the fabric on a still day. Do not attempt to remove the canopy in strong or gusty winds.

REMOVAL OF THE CANOPY: Do not attempt to remove the canopy in strong or gusty winds.

STANDARD ELBOWS: For shade structures with Standard Elbows, loosen the turnbuckle several turns in order to put enough slack in the cable to allow the fabric and cable to unhook from all the elbow hooks. Attach 3/8" or larger ropes to each corner of the fabric and cable before unhooking to secure and properly control the fabric from ground level. If uninstalling in breezy conditions, choose the windy side of the fabric and tie these corners to the posts with the ropes with enough slack to allow for unhooking the fabric from the structure. These ropes are to prevent the shade from flying away in the breeze and to help prevent injury to ground personnel. Once the corners have been secured to the posts, unhook the fabric and cables from each corner.

On the side away from the wind, release the corners of the fabric and cable and have a person hold on to each rope. It may help to wrap the rope around a column to help hold it from getting caught in the wind. Fold the fabric back away from the hooks. Now it will be necessary to remove the cable clamps to allow the cable to be free from the structure and the turnbuckle. If the cable ends are frayed, wrap them with tape. It is usually not necessary nor is it recommended that the cable be removed from the canopy. With a person on each rope, starting at the windy side, gently pull the canopy down in between the framework of the structure. The side away from the wind can be guided with the ropes toward the persons pulling the canopy down.
It is important when reinstalling the canopy, that it is put back in its original orientation to the structure. Starting at the turnbuckle corner, the fabric and cable corners should be returned to their original positions.

GLIDE ELBOWS: For shade structures with Glide Elbows, remove the protective covers from the ends of the glide elbows. Then, using the proper wrench, turn the hex nuts on the end of the Glide Elbow to run the glide hooks to their top most position. Do no loosen the cable clamps, leave the cable intact. Attach 3/8" ropes to each corner of the fabric and cable before unhooking to secure and properly control the fabric from ground level. If uninstalling in breezy conditions, choose the windy side of the fabric and tie these corners to the posts with the ropes with enough slack to allow for unhooking the fabric from the structure. These ropes are to prevent the shade from flying away in the wind and to help prevent injury to ground personnel. Once the corners have been secured to the posts, unhook the fabric and cables. On the side away from the wind, release the corners of the fabric and cable and have a person hold on to each rope. Fold the fabric back away from the hooks. It is a good idea to put the Glide Elbow protective covers back in place. With Glide Elbow installations it is not necessary to loosen or remove the cable clamps nor to remove the cable from the canopy. If the cable ends are frayed, wrap them with tape.
When uninstalling the canopy, mark or identify the corner of origin in such a way that when reinstalling the canopy, it is put back in its original orientation to the structure. The fabric and cable corners should be returned to their original positions when reinstalling the canopy. The cable and fabric should tighten properly when the glide elbows are adjusted down into their tension positions.

SHADE SAILS WITH FANS: For shade sails equipped with fans, loosen the adjustable threaded rod several turns in order to put enough slack in the cable to allow the shackle pin to be removed (do not remove the pins until the fabric corners have been secured with ropes). Attach 3/8" or larger ropes to each corner of the fabric and fan before unhooking to secure and properly control the fabric from ground level. If uninstalling in breezy conditions, choose the windy side of the fabric and tie these corners to the posts with the ropes with enough slack to allow for unhooking the shackle from the structure. These ropes are to prevent the shade from flying away in the breeze and to help prevent injury to ground personnel. Once the corners have been secured to the posts, unhook the shackles and lower the fabric and cable to the ground.

REINSTALLING HINTS

Using the same rope technique, install from the windy side (if it is breezy) making sure to secure these ropes to the posts. Then, throw the remaining corner ropes over the structure and gently pull the canopy into position. The cables and fabric corners can now be fastened on the hooks (and cable guides if so equipped). Next reinstall the clamps if applicable and tightened the cable with the turnbuckle or the Glide Elbows. Do not attempt to install the canopy in strong or gusty winds.

Material Specifications, Warranty, and Policies

Material Specifications

Fabric

- Shade fabric is made of UV stabilized cloth manufactured by Alnet Americas or approved equal
- The high density polyethylene material shall be manufactured with tensioned fabric structures in mind
- The fabric knit is to be made using monofilament and tape filler which has a weight of 9.38 to 10.32 oz. sq. yd. Material to be Rachel-knitted to ensure material will not unravel if cut
- Cloth meets fire resistance tests as follows:

  Alnet Americas Extra Block: California State Fire Marshall Reg. #F-93501

  Others: NFPA 701-99 (Test Method 2) and ASTM E-84

Fabric Properties

Stretch	Stentored
Tear Tests (lbs/ft)	WARP 44.8 WEFT 44
Burst Tests (lbs ft)	828 lbf (ASTM 3786)
Fabric Weight (oz/sqFT)	Avg 1.02 to 1.07 oz.
Fabric Width	9' 10"
Roll Length	150'
Roll Size	63" x 16 ½"
Weight	120 lbs.
Life Expectancy	10 Years
Fading	Minimum Fading After 6 years, 3 Years for Red and Yellow
Min. Temperature	-77°
Max. Temperature	+167°

Shade Protection and UV Screen Protection Factors

Color	Shade Cover	UVR Block Out
True Blue	93%	89%
Beige	97%	87%
Forest Green	96%	94%
Sun Blaze	94%	91%
Silver	95%	93%
Rivergum Green	88.7%	92.9%
Sky Blue	89%	92.2%
Navy Blue	93.6%	94.4%
Turquoise	86%	91.5%
Yellow	77.6%	95.5%

To view a complete list of fabrics, please reference the Color Options page of our catalog by clicking here.

Thread

- Shall be 100% expanded PTFE fiber that is high strength and low shrinkage
- Shall have a wide temperature and humidity range
- Abrasion resistant and UV radiation immunity
- Shall be unaffected by non-hydrocarbon based cleaning agents, acid rain, mildew, chlorine, saltwater, and pollution
- Lockstitch thread – 1200 Denier or equal
- Chain stitch thread – 2400 Denier or equal

Steel Tubing

- All fabricated steel must be in accordance with approved shop drawings and calculations
- All steel is cleaned, degreased, or etched to ensure proper adhesion of Superdurable powder coat in accordance with manufacturer's specifications
- All Steel used on this project needs to be new and accompanied by the mill certificates if requested. Structural steel tubing up to 5"-7 gauge shall be galvanized per Allied Steel FLO-COAT specifications. Schedule 40 black pipe fabrications shall be sand-blasted and primed as described below
- All non-hollow structural shapes comply with ASTM A-36, unless otherwise noted
- All hollow structural steel shapes shall be cold formed HSS ASTM A-53 grade C, unless otherwise noted
- Plate products shall comply with ASTM A-36

Superdurable Powder Coat and Primer

- All non-galvanized steel shade to be sand-blasted and primed prior to Superdurable powder coating using reclaimable blast media in a mixture of GL50 & GL80 Steel Grit
- All non-galvanized steel must be coated with rust inhibiting primer prior to applying the Superdurable powder coat. Primer shall be Marine Grade Cardinal Industrial Finishes Corp. E396-GR1372 epoxy Superdurable powder coating semi-gloss smooth zinc rich primer
- Welds shall be primed with rust inhibiting primer prior to applying the Superdurable powder coat. Primer shall be Marine Grade Cardinal Industrial Finishes Corp E396-GR1372 epoxy Superdurable powder coating semi-gloss smooth zinc rich primer
- All steel parts shall be coated for rust protection and finished with a minimum 3.5 mil thick UV-inhibited weather resistant Superdurable powder coating

Powder Coat Tests		Results
ASTM	Gloss at 60˚	85-95
HOI TM 10.219	PCI Powder Smoothness	7
ASTM D2454-91	Over-Bake Resistance Time	200%
ASTM D3363-92A	Pencil Hardness	H-2H
ASTM D2794-93	Dir/Rev Impact, Gardner	140/140 in/lbs
ASTM D3359-95B	Adhesion, Cross Hatch	5B Pass
ASTM D522-93A	Flexibility Mandrel	¼" dia. No fracture
ASTM B117-95	Salt Spray	1,000 hours
UL DtOV2	Organic Coating Steel Enclosures, Elect Eq.	Recognized

Powder Coat Process Characteristics

N.3.1	Specific Gravity	1.68+/-0.05
N.3.2	Theoretical Coverage	114+/- 4 ft 2/lb/mil
N.3.3	Mass Loss During Cure	<1%
N.3.4	Maximum Storage Temperature	75˚ F

Application Criteria

N.5.1	Electrostatic Spray Cold	Substrate:0.032 in. CRS
N.5.2	Cure Schedule	10 minutes at 400˚ F
N.5.3	Pretreatment	Bonderite 1000
N.5.4	Film Thickness	3.5 Mils

Welds

- All shop welds shall be executed in accordance with the latest edition of the American Welding Society Specifications
- Welding procedures shall comply in accordance with the AWS D1.1-AWS Structural Welding Code-Steel
- All welds to be performed by a certified welder. All welds shall be continuous where length is not given, unless otherwise shown or noted on drawings
- All welds shall develop the full strength of the weaker member. All welds shall be made using E70xx.035 wire
- Shop connections shall be welded unless noted otherwise. Field connections shall be indicated on the drawings. Field welded connections are not acceptable
- All fillet welds shall be a minimum of ¼" unless otherwise noted
- All steel shall be welded shut at terminations to prevent internal leakage
- Internal weld sleeving is not acceptable
- On-site welding of any component is not acceptable

Sewing

- On-site sewing of a fabric will not be accepted
- All corners shall be reinforced with extra non-tear cloth and strap to distribute the load
- The perimeters that contain the cables shall be double lock stitched

Installation Hardware

- Bolt and fastening hardware shall be determined based on calculated engineering loads
- All bolts shall comply with SAE-J429 (Grade 8) or ASTM A325 (Grade BD). All nuts shall comply with ASTM F-594, alloy Group 1 or 2
- Upon request, Stainless Steel hardware shall comply with ASTM A-304
- 1/4" galvanized wire rope shall be 7x19 strand with a breaking strength of 7,000 lbs. for shades generally under 575 sq. ft. unless requested larger by the customer. For shades over 575 sq. ft., cable shall be 5/16" with a breaking strength of 9,800 lbs. Upon request, 1/4" Stainless Steel wire rope shall be 7x19 strand with a breaking strength of 6,400 lbs. 5/16" Stainless Steel wire rope shall be 7/19 strand with a breaking strength of 9,000 lbs.
- All fittings required for proper securing of the cable are hot dipped galvanized

Concrete

- Concrete work shall be executed in accordance with the latest edition of American Concrete Building Code ACI 318 unless specified by the governing municipality
- Concrete specifications shall comply in accordance with, and detailed as, per plans as follows:

    1. 28 Days Strength F'c = 2500 psi
    2. Aggregate: HR
    3. Slump: 3-5
    4. Portland Cement shall conform to C-150

CONCRETE CONTINUED ON NEXT PAGE

5. Aggregate shall conform to ASTM C-33

- All reinforcement shall conform to ASTM A-615 grade 60
- Reinforcing steel shall be detailed, fabricated and placed in accordance with the latest ACI Detailing Manual and manual of Standard Practice
- Whenever daily ambient temperatures are below 80° F, the contractor may have mix accelerators and hot water added at the batch plant (see table)
- The contractor shall not pour any concrete when daily ambient temperature is below 55° F

Concrete Temperate Chart

Temperature Range	% Accelerator	Type Accelerator
75-80°	1%	High Early (non calcium)
70-75°	2%	High Early (non calcium)
Below 70°	3%	High Early (non calcium)

Footings

- All anchor bolts set in new concrete shall be ASTM A-307, or ASTM F-1554 if specified by engineer
- All anchor bolts shall be zinc plated unless specified otherwise
- Footing shall be placed in accordance with and conform to engineered specifications and drawings

SuperiorShade

Color Options

Frames

Backed by a 5-year limited warranty.

Gloss

- Red
- Orange
- Butterscotch
- Yellow
- NEW! Ice Butter (CS)
- Spring Green
- NEW! Ice Mint (CS)
- Chartreuse
- Green
- Sage
- Blue
- Periwinkle
- Royal Purple
- Burgundy
- Beige
- Vanilla
- Brown
- Black
- White

Matte, Textured & Metallic

- NEW! Sea Mist (CS)
- NEW! Azure (CS)
- NEW! Ocean (CS)
- Sky Blue
- Champagne
- Metallic
- Bronze
- Starlight

Waterproof Shade Fabric

For our Arched Cantilever, Flower, and Single Post and Cantilever Waterproof Umbrellas. Backed by a 10-year limited warranty.

- Tan
- White

Traditional Fabric

This selection of fabric options includes colors that are California Fire Marshal certified and pass the NFPA 701 or ASTM E84 tests. Select color options are noted as flame retardant. Backed by a 10-year limited warranty.

- Natural
- Beige
- Latte (FR)
- Desert Sand
- Cedar
- Brown (FR)
- Cayenne
- Sun Blaze (FR)
- Yellow
- Royal Purple
- Sky Blue
- Dove Blue (FR)
- True Blue (FR)
- Aquatic Blue
- Navy Blue
- Turquoise
- Lime (FR)
- Mint Green (FR)
- Forest Green (FR)
- Brunswick Green
- Rivergum
- Midnight (FR)
- Silver (FR)
- Steel Gray
- Pearl Onyx (FR)

Dual Shade Fabric

Available for an upcharge for our Hypar Umbrella, Triangle Sail, and Hyperbolic Sail. Backed by a 10-year limited warranty.

- Citrus
- Sunburst
- Macaw
- Chameleon
- Topaz
- Amazonia
- Savanna
- Cobblestone
- Gold Rush
- Capri
- Santorini
- Maldives

(FR) Fire Retardant

(CS) Color Coming Soon! Ask your representative about availability.

Complete Your Space

When combined, Superior Recreational Products' product lines create complete site environments. Design your space using one superior company. **Visit srpshade.com, srpplayground.com, and srpsiteamenities.com to learn more.**

QUOTE

QUOTE #	TLRQ5565-05
PROJECT NAME	Island Village

Top Line Recreation Inc.
2922 Howland Blvd, Suite 3, Deltona, FL 32725
386-575-8359

Bill to:
Jeffrey Webb
Celebration Residents Owners Association
851 Celebration Avenue
Celebration, FL 34747
863-604-0480
jeffrey.webb@townhall.celebration.fl.us

Ship to:
Jeffrey Webb
Celebration Residents Owners Association
Island Village Pool
1831 Island Village Way
Celebration, FL 34747
863-604-0480
jeffrey.webb@townhall.celebration.fl.us

SALESPERSON	PAYMENT TERMS	QUOTE CREATED	QUOTE EXPIRES
Debbie Lloyd	NET 30	Apr 4, 2024	May 6, 2024

QTY	PART NUMBER	DESCRIPTION	UNIT PRICE	TOTAL PRICE
		Island Village Pool Quote 5		
1	SUP74574	Island Village Pool Equipment Area Superior 18' x 17' x 8' Cantilever with 2 Columns. Posts to be install outside wood fence within bushes between sidewalk & fence.	$13,884.00	$13,884.00
1	ENG1SUP	FL Engineer Sealed Drawings & Calculations	$1,250.00	$1,250.00
1	FREIGHT	Charges to Celebration, FL 34747	$937.50	$937.50
1	INSTALL	Buildworx Site Prep to remove a few small bushes next to fence for footer install. Installation includes 18' x 17' x 8' Cantilever with 2 posts, footers outside fence, and in between wood fence and sidewalk. Footer dirt to be hauled away. Anchor bolts to be supplied by manufacturer.	$9,550.00	$9,550.00
1	LOCATES	Ground Hound underground penetrating radar	$1,062.50	$1,062.50
1	PERMIT	Osceola Permit Submittal Service (This does not include the Actual Cost of the permit) *Actual jurisdictional receipts will be billed at cost.	$1,062.50	$1,062.50
1	TLRCD	Top Line Recreation Courtesy Discount	-$1,400.00	-$1,400.00
		Note: Customer responsible for any pool equipment, drains or pipes, etc. to be moved if required. Removal of any bushes will NOT be replaced.		

SUBTOTAL	$26,346.50
TAX RATE	0.0750
SALES TAX	$1,041.30
TOTAL	$27,387.80

Please contact me if I can be of further assistance.
DEBBIE LLOYD 407-579-1410

2922 Howland Blvd, Suite 3
Deltona, FL 32725
386-789-4508 / 888-909-0549 Fax
800-921-4509 Toll Free
info@toplinerec.com

Client:

General Terms:

Please note that this order is non-cancelable once placed, and deposit is non-refundable. If shipment is refused when delivery is attempted, carrier will return the shipment to the manufacturer and all resulting charges will be applied to your account.

Acceptance by either a signature or a purchase order based on this proposal indicates that you are in full agreement with all terms and conditions of this proposal including the following:

Prices are valid for 30 days. After 30 days, prices are subject to change without notice. Sales tax will be charged unless a copy of a valid Sales tax exemption certificate is presented with order. Specify all color selections in writing. Any discrepancies that arise due to oral color selections will be the responsibility of the customer. If customer is installing equipment, all equipment is to be installed per manufacturer's instructions and appropriate guidelines such as ASTM and CPSC.

Installation, site work, building permits, engineered drawings, etc. are not included unless noted.

Installation Terms:
Standard Services Include:
- Shipping Notification/Receiving Instructions
- Pre-Installation On-Site Meeting
- Underground Utility Check (Sunshine State One Call)
- Accept Delivery and Unload Equipment (If site is ready)
-Moving New Equipment to Job Site
- Layout of Equipment
- Installation of Equipment and Materials Per Manufacturer's Instructions
- Trash Clean Up (Dumpsters and Off-Site Trash Disposal not Standard)
- Post-Installation Walk Through
- Maintenance Explanation

Customer Responsibilities (Applicable if Top Line Recreation, Inc is NOT installing):

- Trash Disposal - Dumpsters or Off Site Disposal.
- Accept Delivery and Unload Equipment (If site is not ready.) $500.00 Charge will Apply if Customer Wants Installers to Unload.
- Provide Area for Storage and Staging.
- Secure Site and Equipment.
- Provide Access as Outlined below.

Some Optional Responsibilities (Must be clearly outlined in the applicable quotation/contract):
- Removal of Existing Equipment.
- Site Preparation and Grading, Drainage Systems, etc.
- Engineered Drawings for Purchased Equipment.
- Other Permits or Engineered Drawings (i.e. zoning permits, environmental permits, site surveys, etc.)

*Any other responsibilities must be clearly outlined in the applicable quotation/contract.

Building permits
Building permits are the responsibility of the owner. If a building permit is required for your project, there will be an administrative, expeditor, and application fee included on project quote. This fee does not include the cost of the actual permit. Customer will be charged "actual permit" cost on last invoice.

NOTE - All zoning, planning, environmental, etc. permits and approvals are the responsibility of others.

Other Notes:
Access/Utilities. Access must be provided to the installation area for heavy trucks and equipment. Access of equipment and personnel is the obligation of the customer to provide until the project is fully completed. We will take every precaution to avoid damage, however any damage caused by the normal installation of our product, such as sod, concrete sidewalks, private underground utilities, etc., will be the responsibility of the customer, as will any additional costs associated with limiting damage such as providing plywood over sod for access. If access is not reasonably close to the jobsite, any additional costs incurred due to having to transport materials and/or supplies will be the responsibility of the customer.
Rock/Foreign Object Clause. Most installations require digging of holes and footing equipment in concrete below finished grade. Removal of existing ground covers such as asphalt, concrete, tan bark, sand, pea gravel, wood fiber, rubber matting, poured-in-place rubber surfacing, or any other material that interferes or delays the digging of holes, is the responsibility of others, unless otherwise noted. If excessive underground obstructions such as rock, coral, asphalt, concrete, pipes, drainage systems, root systems, water, or any other unknown obstructions are discovered, charges will be added to the original proposal.

Playground Surfacing. All playground equipment is to be installed over safety surfacing per CPSC guidelines and ASTM standards. If the customer contracts for something contrary to the guidelines, they are accepting all responsibility for any liability and future litigation that may arise.

If a special inspection is required, an additional fee of $700.00 will be added to the final invoice.

Acceptance Signature _____ Date _____ P.O. # _____

Tax Exempt No._____

Material Specifications, Warranty, and Policies

Material Specifications

Fabric

- Shade fabric is made of UV stabilized cloth manufactured by Alnet Americas or approved equal
- The high density polyethylene material shall be manufactured with tensioned fabric structures in mind
- The fabric knit is to be made using monofilament and tape filler which has a weight of 9.38 to 10.32 oz. sq. yd. Material to be Rachel-knitted to ensure material will not unravel if cut
- Cloth meets fire resistance tests as follows:

  Alnet Americas Extra Block: California State Fire Marshall Reg. #F-93501

  Others: NFPA 701-99 (Test Method 2) and ASTM E-84

Fabric Properties

Stretch	Stentored
Tear Tests (lbs/ft)	WARP 44.8 WEFT 44
Burst Tests (lbs ft)	828 lbf (ASTM 3786)
Fabric Weight (oz/sqFT)	Avg 1.02 to 1.07 oz.
Fabric Width	9′ 10″
Roll Length	150′
Roll Size	63″ x 16 ½″
Weight	120 lbs.
Life Expectancy	10 Years
Fading	Minimum Fading After 6 years, 3 Years for Red and Yellow
Min. Temperature	-77˚
Max. Temperature	+167˚

Shade Protection and UV Screen Protection Factors

Color	Shade Cover	UVR Block Out
True Blue	93%	89%
Beige	97%	87%
Forest Green	96%	94%
Sun Blaze	94%	91%
Silver	95%	93%
Rivergum Green	88.7%	92.9%
Sky Blue	89%	92.2%
Navy Blue	93.6%	94.4%
Turquoise	86%	91.5%
Yellow	77.6%	95.5%

To view a complete list of fabrics, please reference the Color Options page of our catalog by clicking here.

Thread

- Shall be 100% expanded PTFE fiber that is high strength and low shrinkage
- Shall have a wide temperature and humidity range
- Abrasion resistant and UV radiation immunity
- Shall be unaffected by non-hydrocarbon based cleaning agents, acid rain, mildew, chlorine, saltwater, and pollution
- Lockstitch thread – 1200 Denier or equal
- Chain stitch thread – 2400 Denier or equal

Steel Tubing

- All fabricated steel must be in accordance with approved shop drawings and calculations
- All steel is cleaned, degreased, or etched to ensure proper adhesion of Superdurable powder coat in accordance with manufacturer's specifications
- All Steel used on this project needs to be new and accompanied by the mill certificates if requested. Structural steel tubing up to 5"-7 gauge shall be galvanized per Allied Steel FLO-COAT specifications. Schedule 40 black pipe fabrications shall be sand-blasted and primed as described below
- All non-hollow structural shapes comply with ASTM A-36, unless otherwise noted
- All hollow structural steel shapes shall be cold formed HSS ASTM A-53 grade C, unless otherwise noted
- Plate products shall comply with ASTM A-36

Superdurable Powder Coat and Primer

- All non-galvanized steel shade to be sand-blasted and primed prior to Superdurable powder coating using reclaimable blast media in a mixture of GL50 & GL80 Steel Grit
- All non-galvanized steel must be coated with rust inhibiting primer prior to applying the Superdurable powder coat. Primer shall be Marine Grade Cardinal Industrial Finishes Corp. E396–GR1372 epoxy Superdurable powder coating semi-gloss smooth zinc rich primer
- Welds shall be primed with rust inhibiting primer prior to applying the Superdurable powder coat. Primer shall be Marine Grade Cardinal Industrial Finishes Corp E396-GR1372 epoxy Superdurable powder coating semi-gloss smooth zinc rich primer
- All steel parts shall be coated for rust protection and finished with a minimum 3.5 mil thick UV-inhibited weather resistant Superdurable powder coating

Powder Coat Tests		Results
ASTM	Gloss at 60˚	85-95
HOI TM 10.219	PCI Powder Smoothness	7
ASTM D2454-91	Over-Bake Resistance Time	200%
ASTM D3363-92A	Pencil Hardness	H-2H
ASTM D2794-93	Dir/Rev Impact, Gardner	140/140 in/lbs
ASTM D3359-95B	Adhesion, Cross Hatch	5B Pass
ASTM D522-93A	Flexibility Mandrel	¼" dia. No fracture
ASTM B117-95	Salt Spray	1,000 hours
UL DtOV2	Organic Coating Steel Enclosures, Elect Eq.	Recognized

Powder Coat Process Characteristics

N.3.1	Specific Gravity	1.68+/-0.05
N.3.2	Theoretical Coverage	114+/- 4 ft 2/lb/mil
N.3.3	Mass Loss During Cure	<1%
N.3.4	Maximum Storage Temperature	75˚ F

Application Criteria

N.5.1	Electrostatic Spray Cold	Substrate:0.032 in. CRS
N.5.2	Cure Schedule	10 minutes at 400˚ F
N.5.3	Pretreatment	Bonderite 1000
N.5.4	Film Thickness	3.5 Mils

Welds

- All shop welds shall be executed in accordance with the latest edition of the American Welding Society Specifications
- Welding procedures shall comply in accordance with the AWS D1.1-AWS Structural Welding Code-Steel
- All welds to be performed by a certified welder. All welds shall be continuous where length is not given, unless otherwise shown or noted on drawings
- All welds shall develop the full strength of the weaker member. All welds shall be made using E70xx.035 wire
- Shop connections shall be welded unless noted otherwise. Field connections shall be indicated on the drawings. Field welded connections are not acceptable
- All fillet welds shall be a minimum of ¼" unless otherwise noted
- All steel shall be welded shut at terminations to prevent internal leakage
- Internal weld sleeving is not acceptable
- On-site welding of any component is not acceptable

Sewing

- On-site sewing of a fabric will not be accepted
- All corners shall be reinforced with extra non-tear cloth and strap to distribute the load
- The perimeters that contain the cables shall be double lock stitched

Installation Hardware

- Bolt and fastening hardware shall be determined based on calculated engineering loads
- All bolts shall comply with SAE-J429 (Grade 8) or ASTM A325 (Grade BD). All nuts shall comply with ASTM F-594, alloy Group 1 or 2
- Upon request, Stainless Steel hardware shall comply with ASTM A-304
- 1/4" galvanized wire rope shall be 7x19 strand with a breaking strength of 7,000 lbs. for shades generally under 575 sq. ft. unless requested larger by the customer. For shades over 575 sq. ft., cable shall be 5/16" with a breaking strength of 9,800 lbs. Upon request, 1/4" Stainless Steel wire rope shall be 7x19 strand with a breaking strength of 6,400 lbs. 5/16" Stainless Steel wire rope shall be 7/19 strand with a breaking strength of 9,000 lbs.
- All fittings required for proper securing of the cable are hot dipped galvanized

Concrete

- Concrete work shall be executed in accordance with the latest edition of American Concrete Building Code ACI 318 unless specified by the governing municipality
- Concrete specifications shall comply in accordance with, and detailed as, per plans as follows:

    1. 28 Days Strength F'c = 2500 psi
    2. Aggregate: HR
    3. Slump: 3-5
    4. Portland Cement shall conform to C-150

CONCRETE CONTINUED ON NEXT PAGE

5. Aggregate shall conform to ASTM C-33

- All reinforcement shall conform to ASTM A-615 grade 60
- Reinforcing steel shall be detailed, fabricated and placed in accordance with the latest ACI Detailing Manual and manual of Standard Practice
- Whenever daily ambient temperatures are below 80˚ F, the contractor may have mix accelerators and hot water added at the batch plant (see table)
- The contractor shall not pour any concrete when daily ambient temperature is below 55˚ F

Concrete Temperate Chart

Temperature Range	% Accelerator	Type Accelerator
75-80˚	1%	High Early (non calcium)
70-75˚	2%	High Early (non calcium)
Below 70˚	3%	High Early (non calcium)

Footings

- All anchor bolts set in new concrete shall be ASTM A-307, or ASTM F-1554 if specified by engineer
- All anchor bolts shall be zinc plated unless specified otherwise
- Footing shall be placed in accordance with and conform to engineered specifications and drawings

Shade Warranty

Superior Recreational Products (SRP) warrants that its product will be free from defects in materials and workmanship as well as maintain structural integrity for the periods listed below from the date of invoice and once SRP has been paid in full. This warranty is in effect only if the product has been assembled and installed strictly in accordance with the setup instructions provided by SRP, good construction practices, general maintenance and care is provided as per instructions in the customer packet, and has been subjected only to normal use and exposure. Product should be maintained per the instructions given at time of delivery.

- **LW** Lifetime* Warranty on stainless steel hardware
- **20** 20-Year Limited Warranty on framework
- **10** 10-Year Limited Warranty on fabric
- **5** 5-Year Limited Warranty on powder coat
- **1** 1-Year Limited Warranty on cables
- **1** 1-Year Limited Warranty on materials not above

The Limited Warranty excludes abnormal conditions, contingent liability, cosmetic defects such as scratches, dents, marring, stripping, peeling, or fading; damage due to incorrect installation, vandalism, misuse, accident wear and tear from normal use; exposure to extreme weather, immersion in salt or chlorine water, damage due to sand, salt spray, or other abrasive and corrosive material; unauthorized repair or modification, abnormal use, or lack of maintenance. The warranty does not cover damages due to “acts of God” such as hail, flooding, lightning, tornadoes, sand storms, shifts of terrain, earthquakes, mudslides, and windstorms.

SRP does not warrant product for defects caused by erection, harsh site conditions, lack of maintenance, and/or other conditions beyond SRP’s control. SRP will not be held responsible for any materials that were not properly stored prior to installation. SRP reserves the right to void the limited warranty if it not installed per the installation instructions and/or unauthorized modifications.

In the unlikely event of failure, SRP reserves the right to alter the design, color, or contributing factors to rectify the condition and help prevent any future reoccurrence(s). SRP has the option to repair or replace any defect in materials.

The warranty is void if any changes, modifications, additions, or attachments are made to the product without the written consent of the manufacturer.

No signs, objects, ornaments, fans, lights, fixtures, or decorations may be hung from the structure unless specifically designed and engineered by the manufacturer or has manufacturers written approval.

SRP excludes any implied warranty of merchantability, fitness, or purpose, and there are no warranties which extend beyond the description of the face hereof. Under no circumstances will SRP be responsible for any indirect, special, consequential, incidental, or liquidated damages due to breach of warranty and such damages are specifically excluded from the warranty.

The owner shall notify SRP with original Sales Order Number issued from SRP to arrange for an inspection within 30 days after discovery of any defect under this warranty and before any alteration or repair is made or attempted. This Limited Warranty shall be null and void if the owner makes any alterations in design.

This warranty is the only express warranty given by the company. No person has authority to change or add to these obligations and liabilities. The company reserves the right to determine whether the fault is caused by faulty workmanship, material, or the part that is defective.

SRP will repair or replace at its discretion any defective part/s on an Ex-Works basis only. It is the responsibility of the customer to return the whole unit or the defective part/s at their own cost back to SRP for inspection along with proof of the date of purchase. SRP will not be liable for any costs incurred by the customer as a result of replacing the defective part/s, including but not limited to the costs of site visits and the labor costs involved with the removal and reinstallation of the whole unit or the defective part/s. Furthermore SRP will not be liable for any claimed compensation while the unit is not working or not present at the site whatsoever. This guarantee does not entitle the customer to a complete new product due to a defective component.

Limited Warranty: Structural Steel

SRP offers a 20-year Limited Warranty on structural steel frames for shade canopies against failure due to rust-through corrosion under normal environmental conditions. Should the fabric or parts need to be replaced under the warranty, SRP will manufacture and ship new replacement parts at no charge for the first ten years, thereafter pro-rated at 10% per annum over the last ten years.

Workmanship is warranted for a period of five years. This steel warranty shall be void if damage to the steel is caused by the installer or from physical damage, damage by salt spray or sprinkler systems, contact with chemicals, chlorine, pollution, misuse, vandalism, or any act of God.

Limited Warranty: Powder Coat

Superior Recreational Products offers a 5-year Limited Warranty for powder coating to the original purchaser. This Limited Warranty is for factory applied finish only. Damage occurring from shipping, erection, vandalism, accidents, or field modification is not covered in this limited warranty and will require field touch-up immediately and periodically thereafter. The owner must report any defect in powder coat at the time the installation is completed. Not covered by this Limited Warranty are acute angles, welds, and end plates.

The Limited Warranty for powder coating provides the following after a 5-year exposure period when applied according to the recommendations listed on the product's technical data sheet and appropriate surface preparation has been utilized.

- The coatings shall retain their original color with a ΔE of <7.5 units for high chroma colors (yellows, reds, oranges, etc.) and a ΔE of<5.0 units for low chroma colors, when tested in accordance with ASTM D 2244.
- The coating shall retain a minimum of 50% of its original gloss level after washing, when tested in accordance with ASTM D 523.
- The coating shall exhibit chalking no worse than numerical rating of 6, when evaluated in accordance with ASTM D 659-80.

Limited Warranty: Shade Fabric

Traditional shade fabric made with PTFE fiber that is high strength and low shrinkage and VALMEX® MEHATOP F 1 waterproof fabric carry a 10-year limited warranty. This warranties that the sewing thread used on the traditional shade fabric will be free from defects in material and workmanship and will not be damaged by exposure to sunlight, weather, and water. All other warranties are disclaimed.

SRP fabrics carry a 10-Year Limited Manufacturer's Warranty from the date of delivery against failure from significant fading**, deterioration, breakdown, outdoor heat, cold, or discoloration. Should the fabric need to be replaced under the warranty, SRP will manufacture and ship new fabric at no charge for the first six years, thereafter pro-rated at 18% per annum over the last four years. **The colors red and yellow are warranted against significant fading for only two years.

If the corners of the fabric are equipped with both holes in the fabric corner PLUS reinforcing straps, BOTH the strap and fabric hole must be placed over each corner hook or the fabric warranty is void.

Fabric curtains, valences, or flat vertical panels are not covered under the warranty.

Fabric is not warranted where it is installed on a structure that is not engineered and built by SRP or its agents.

This warranty shall be void if damage to or failure to the shade is caused by contact with chemicals, chlorine, bleaching agents, hydrocarbons or hydrocarbon containing solvents, misuse, vandalism, or any act of God, including but not limited to wind in excess of the wind limitations set forth below.

All fabric tops are warranted for sustained winds up to 76 mph (Hurricane Force 1) and for gusts of up to 3 seconds duration up to 90 mph. Removal of the shade fabric is required if damaging winds are called for. Damage due to snow and/or ice accumulation is not covered by this warranty. Canopies should be removed during the "off season."

These structures have been designed to eliminate any friction between the rafters and the fabric. The warranty will, therefore, be voided if any modification (temporary or permanent) is made to the rafter, cross pieces, or ridge beams, or if the fastening apparatus or canopy are not secured accordingly.

Structures are warranted for winds up to 90 or 105 mph only if shade canopies have been removed as per requirement set forth above in the fabric paragraph. Removal and re-installation must be performed by a qualified person or authorized dealer.

**For the purpose of this warranty, lifetime encompasses no specific term of years, but rather that seller warrants to its original customer for as long as the original customer owns the product and uses the product for its intended purpose that the product and all parts will be free from defects in materials and manufacturing workmanship. This warranty does not cover damage caused by vandalism, misuse or abuse, altered or modified parts, or cosmetic damage such as scratches, dents, or fading or weathering and normal wear and tear. This warranty is valid only if the structures are installed in conformity with instructions provided by Superior Recreational Products using approved Superior Recreational Products parts. Superior Recreational Products will deliver the repaired or replacement part or parts to the site free of charge, but will not be responsible for labor or the labor costs of replacement. Warranty claims must be filed within the applicable warranty period and accompanied by a sales order or invoice number.*

Policies

Pricing Policy

All prices are F.O.B. factor and do not include freight, installation, shipping and handling, surfacing, or applicable taxes. All prices listed were current at the time of printing and in U.S. currency. Prices are subject to change without notice.

Cancellation and Return Policy

To view our return policy, please visit superiorrecreationalproducts.com/returns. For information on Return Material Authorizations please call 1.800.327.8774.

Shipping Policy

To view our shipping policy, please visit superiorrecreationalproducts.com/shipping. For any further information please call 1.800.327.8774.

Appendix

Proper Care, Maintenance, and Safe Removal of the Shade Canopy

THINGS TO AVOID

SNOW, ICE, AND HIGH WINDS: Remove the canopy in winter conditions as ice and snow loads are not covered by the warranty. The same goes for winds in excess of hurricane force 1.

SHARP OBJECTS: Always avoid dragging the fabric across surfaces, etc. Roll or fold the fabric and carry it. Avoid sharp objects, bolts, snags, and other protrusions including mounting hardware.

OBSTRUCTIONS: Keep foliage, such as tree limbs, shrubbery, and bushes, trimmed back and away from fabric at least three to four feet.

SOURCES OF HEAT: Avoid contact with heat sources such as hot lights, torches, and avoid using grills, etc. under the fabric or fireworks near the fabric..

SLACK CABLE IN CANOPY: Canopies with loose cables can fail.

CLEANING THE FABRIC

The fabric itself is generally maintenance free with the exception of necessary removal due to weather or seasonal requirements. The fabric does not harbor mildew or mold, but residues such as tree sap, leaves, bird droppings, dust and dirt may need to be removed. To clean the fabric, use water and mild soap. A soft mop or soft broom may also be used. Cleaners that do not contain hydrocarbons, solvents, bleach or ammonia may be used. Use of solvents, hydrocarbons, bleach, and ammonia type cleaners will void the fabric warranty. A pressure washer may be used if necessary using a wide-spray nozzle.

CABLES AND HARDWARE

It is recommended that the cables be replaced every 3 to 4 years or if corrosion is visible, whichever comes first. Canopy cables that are not maintained at optimum tension will be subject to shorter lifespans and potential failures earlier than our recommend cable replacement scheduling. The cable ends must be wrapped with tape to secure any wires; thus, preventing the wires from tearing the fabric. Taping must be done when removing old cable as well as when installing new cable. Clamps should be replaced when the cable is replaced. If the cable appears slack on a still day (no wind), immediately have the cable and clamps re-tightened by a qualified person. The cable should not be slack.

GLIDE ELBOW™

Lubricate Glide Elbows™ annually and before operating. A waterproof grease is recommended such as a lithium-based grease or anti-seize thread lubricant.

STORAGE

Fabric must be stored in a clean, dry place free from snags, sharp edges, etcetera. The storage area must be rodent-free. Wrap all hardware fittings with rags or some other protector, as they can damage the fabric.

UNINSTALLING THE SHADE CANOPY

NECESSARY CARE: It is important to take necessary care when handling the fabric during removal and installation to prevent damage to the fabric as well as SAFE control of the fabric in a breeze or wind. The fabric is tough and engineered for use as a shade, but it can tear or cut when or if pulled over a snag or sharp item; it can puncture from bolts or other protruding objects; and it can melt from objects such as like cigarettes, matches, hot torch tips, sparks and the like. In addition, care must be exercised to avoid the fabric hooks after the fabric is unhooked from the elbow corners and sides of the structure where there are intermediate supports. It is best to wrap any connected mounting hardware to prevent it from harming the fabric.

PROPER AND SAFE: Based on the size of the canopy, several persons may be needed to properly and safely handle the fabric during the uninstalling process. You will need several commercial ladders or other means to work safely at heights such as scissor lifts, etc. It is advised that you pad the post side of the ladder and tie the ladder to the post. The pad is to protect the post finish. Also keep in mind that every 100 square feet of fabric (10' X 10') weighs approximately five pounds; a large canopy can get heavy fast. For proper control of the fabric, read below. It is best to remove the fabric on a still day. Do not attempt to remove the canopy in strong or gusty winds.

REMOVAL OF THE CANOPY: Do not attempt to remove the canopy in strong or gusty winds.

STANDARD ELBOWS: For shade structures with Standard Elbows, loosen the turnbuckle several turns in order to put enough slack in the cable to allow the fabric and cable to unhook from all the elbow hooks. Attach 3/8" or larger ropes to each corner of the fabric and cable before unhooking to secure and properly control the fabric from ground level. If uninstalling in breezy conditions, choose the windy side of the fabric and tie these corners to the posts with the ropes with enough slack to allow for unhooking the fabric from the structure. These ropes are to prevent the shade from flying away in the breeze and to help prevent injury to ground personnel. Once the corners have been secured to the posts, unhook the fabric and cables from each corner.

On the side away from the wind, release the corners of the fabric and cable and have a person hold on to each rope. It may help to wrap the rope around a column to help hold it from getting caught in the wind. Fold the fabric back away from the hooks. Now it will be necessary to remove the cable clamps to allow the cable to be free from the structure and the turnbuckle. If the cable ends are frayed, wrap them with tape. It is usually not necessary nor is it recommended that the cable be removed from the canopy. With a person on each rope, starting at the windy side, gently pull the canopy down in between the framework of the structure. The side away from the wind can be guided with the ropes toward the persons pulling the canopy down.
It is important when reinstalling the canopy, that it is put back in its original orientation to the structure. Starting at the turnbuckle corner, the fabric and cable corners should be returned to their original positions.

GLIDE ELBOWS: For shade structures with Glide Elbows, remove the protective covers from the ends of the glide elbows. Then, using the proper wrench, turn the hex nuts on the end of the Glide Elbow to run the glide hooks to their top most position. Do no loosen the cable clamps, leave the cable intact. Attach 3/8" ropes to each corner of the fabric and cable before unhooking to secure and properly control the fabric from ground level. If uninstalling in breezy conditions, choose the windy side of the fabric and tie these corners to the posts with the ropes with enough slack to allow for unhooking the fabric from the structure. These ropes are to prevent the shade from flying away in the wind and to help prevent injury to ground personnel. Once the corners have been secured to the posts, unhook the fabric and cables. On the side away from the wind, release the corners of the fabric and cable and have a person hold on to each rope. Fold the fabric back away from the hooks. It is a good idea to put the Glide Elbow protective covers back in place. With Glide Elbow installations it is not necessary to loosen or remove the cable clamps nor to remove the cable from the canopy. If the cable ends are frayed, wrap them with tape.
When uninstalling the canopy, mark or identify the corner of origin in such a way that when reinstalling the canopy, it is put back in its original orientation to the structure. The fabric and cable corners should be returned to their original positions when reinstalling the canopy. The cable and fabric should tighten properly when the glide elbows are adjusted down into their tension positions.

SHADE SAILS WITH FANS: For shade sails equipped with fans, loosen the adjustable threaded rod several turns in order to put enough slack in the cable to allow the shackle pin to be removed (do not remove the pins until the fabric corners have been secured with ropes). Attach 3/8" or larger ropes to each corner of the fabric and fan before unhooking to secure and properly control the fabric from ground level. If uninstalling in breezy conditions, choose the windy side of the fabric and tie these corners to the posts with the ropes with enough slack to allow for unhooking the shackle from the structure. These ropes are to prevent the shade from flying away in the breeze and to help prevent injury to ground personnel. Once the corners have been secured to the posts, unhook the shackles and lower the fabric and cable to the ground.

REINSTALLING HINTS

Using the same rope technique, install from the windy side (if it is breezy) making sure to secure these ropes to the posts. Then, throw the remaining corner ropes over the structure and gently pull the canopy into position. The cables and fabric corners can now be fastened on the hooks (and cable guides if so equipped). Next reinstall the clamps if applicable and tightened the cable with the turnbuckle or the Glide Elbows. Do not attempt to install the canopy in strong or gusty winds.

Discussion Item R

Landscaping RFP for Large Parks and Island Village

1. Exquisite Lawn Care
2. Florida Commercial Care, Inc.

EXQUISITE LAWN CARE
407 719 5944

52 Riley #402
Celebration, FL 34747
(407) 719-5944
brian@exquisitelawncare.com

CROA 04/03/2024

To whom it may concern,

We are once again pleased to have the opportunity to bid on multiple areas for CROA. It is an honor to be a vendor currently and to have been invited to bid on the remainder of the parks. We appreciate the opportunity to provide you with information about our company, staff, and experience.

We purchased Exquisite Lawn Care in 2010 and have continually grown the company since. I have previously worked for Isleworth, Seaworld, and Universal Studios as a Horticulturist and Lead Horticulturist. I have also held the position of Account Manager with a larger commercial maintenance company. I hold a Trade Certificate with Valencia Community College and I am currently certified as a Horticulture Professional with the FNGLA and am continuing education with this organization as well as pursuing ISA certification for arboriculture. The majority of my experience is with managing larger commercial lawn maintenance accounts and commercial landscaping projects much like the service areas, passive parks, and active parks of Celebration.

We are highly knowledged in Celebration covenants and requirements. We currently have a healthy mix of commercial and residential properties inside Celebration, the majority with long-standing contracts. Our staff and teams are dedicated and knowledgeable and take great pride in their work. We are consistently complimented on their friendly demeanor and polite mannerisms.

Irrigation will be handled by our company. Our irrigation team will be ready to handle any problems that arise quickly and efficiently. We have proved our commitment repeatedly in the past with our response time to minor repairs as well as emergencies. Pest control including fertilization will be handled by Pest Patrol, a locally owned and family operated partner of ours for 14 years, and overseen by their general manager and myself.

Please feel free to contact me with any questions, comments, or concerns. We are excited for the opportunity to continue our growth in the beautiful town of Celebration.

Sincerely,
Brian Causey

CERTIFICATE OF LIABILITY INSURANCE

DATE (MM/DD/YYYY): 04/04/2024

THIS CERTIFICATE IS ISSUED AS A MATTER OF INFORMATION ONLY AND CONFERS NO RIGHTS UPON THE CERTIFICATE HOLDER. THIS CERTIFICATE DOES NOT AFFIRMATIVELY OR NEGATIVELY AMEND, EXTEND OR ALTER THE COVERAGE AFFORDED BY THE POLICIES BELOW. THIS CERTIFICATE OF INSURANCE DOES NOT CONSTITUTE A CONTRACT BETWEEN THE ISSUING INSURER(S), AUTHORIZED REPRESENTATIVE OR PRODUCER, AND THE CERTIFICATE HOLDER.

IMPORTANT: If the certificate holder is an ADDITIONAL INSURED, the policy(ies) must have ADDITIONAL INSURED provisions or be endorsed. If SUBROGATION IS WAIVED, subject to the terms and conditions of the policy, certain policies may require an endorsement. A statement on this certificate does not confer rights to the certificate holder in lieu of such endorsement(s).

PRODUCER	CONTACT NAME: Heather Thies
StateFarm Heather Thies 525 W. Highway 50 Clermont FL 34711	PHONE (A/C, No, Ext): 352-394-6933 FAX (A/C, No): E-MAIL ADDRESS: heather.thies.pbcj@statefarm.com
INSURED EXQUISITE LAWN CARE 6905 GREENGROVE BLVD CLERMONT FL 347148364	INSURER(S) AFFORDING COVERAGE / NAIC # INSURER A : State Farm Mutual Automobile Insurance Company 25178 INSURER B : INSURER C : INSURER D : INSURER E : INSURER F :

COVERAGES **CERTIFICATE NUMBER:** **REVISION NUMBER:**

THIS IS TO CERTIFY THAT THE POLICIES OF INSURANCE LISTED BELOW HAVE BEEN ISSUED TO THE INSURED NAMED ABOVE FOR THE POLICY PERIOD INDICATED. NOTWITHSTANDING ANY REQUIREMENT, TERM OR CONDITION OF ANY CONTRACT OR OTHER DOCUMENT WITH RESPECT TO WHICH THIS CERTIFICATE MAY BE ISSUED OR MAY PERTAIN, THE INSURANCE AFFORDED BY THE POLICIES DESCRIBED HEREIN IS SUBJECT TO ALL THE TERMS, EXCLUSIONS AND CONDITIONS OF SUCH POLICIES. LIMITS SHOWN MAY HAVE BEEN REDUCED BY PAID CLAIMS.

INSR LTR	TYPE OF INSURANCE	ADD INSD	SUB WVD	POLICY NUMBER	POLICY EFF (MM/DD/YYYY)	POLICY EXP (MM/DD/YYYY)	LIMITS	
	COMMERCIAL GENERAL LIABILITY ☐ CLAIMS-MADE ☐ OCCUR GEN'L AGGREGATE LIMIT APPLIES PER: ☐ POLICY ☐ PRO-JECT ☐ LOC ☐ OTHER:						EACH OCCURRENCE DAMAGE TO RENTED PREMISES (Ea occurrence) MED EXP (Any one person) PERSONAL & ADV INJURY GENERAL AGGREGATE PRODUCTS - COMP/OP AGG $	$ $ $ $ $ $ $
A	AUTOMOBILE LIABILITY ☐ ANY AUTO ☐ OWNED AUTOS ONLY ☐ HIRED AUTOS ONLY ☒ SCHEDULED AUTOS ☐ NON-OWNED AUTOS ONLY	N	N	L41 3762-D26-59B L41 3760-D26-59B L41 3765-D26-59B L41 3759-D26-59B	10/26/2023 10/26/2023 10/26/2023 10/26/2023	04/26/2024 04/26/2024 04/26/2024 04/26/2024	COMBINED SINGLE LIMIT (Ea accident) BODILY INJURY (Per person) BODILY INJURY (Per accident) PROPERTY DAMAGE (Per accident) $	$ $ 1,000,000 $ 1,000,000 $ 1,000,000 $
	UMBRELLA LIAB ☐ OCCUR EXCESS LIAB ☐ CLAIMS-MADE DED ☐ RETENTION $						EACH OCCURRENCE AGGREGATE $	$ $ $
	WORKERS COMPENSATION AND EMPLOYERS' LIABILITY ANY PROPRIETOR/PARTNER/EXECUTIVE OFFICER/MEMBER EXCLUDED? Y/N ☐ (Mandatory in NH) If yes, describe under DESCRIPTION OF OPERATIONS below	N/A					PER STATUTE ☐ OTH-ER E.L. EACH ACCIDENT E.L. DISEASE - EA EMPLOYEE E.L. DISEASE - POLICY LIMIT	$ $ $ $

DESCRIPTION OF OPERATIONS / LOCATIONS / VEHICLES (ACORD 101, Additional Remarks Schedule, may be attached if more space is required)

CERTIFICATE HOLDER

CELEBRATION RESIDENTIAL OWNERS ASSOCIATION
C/O GRAND MANORS
PO BOX 803555
DALLAS TX 75380

CANCELLATION

SHOULD ANY OF THE ABOVE DESCRIBED POLICIES BE CANCELLED BEFORE THE EXPIRATION DATE THEREOF, NOTICE WILL BE DELIVERED IN ACCORDANCE WITH THE POLICY PROVISIONS.

AUTHORIZED REPRESENTATIVE

This form was system-generated on 04/04/2024

© 1988-2015 ACORD CORPORATION. All rights reserved.

The ACORD name and logo are registered marks of ACORD

CERTIFICATE OF LIABILITY INSURANCE

DATE (MM/DD/YYYY): 07/11/2023

THIS CERTIFICATE IS ISSUED AS A MATTER OF INFORMATION ONLY AND CONFERS NO RIGHTS UPON THE CERTIFICATE HOLDER. THIS CERTIFICATE DOES NOT AFFIRMATIVELY OR NEGATIVELY AMEND, EXTEND OR ALTER THE COVERAGE AFFORDED BY THE POLICIES BELOW. THIS CERTIFICATE OF INSURANCE DOES NOT CONSTITUTE A CONTRACT BETWEEN THE ISSUING INSURER(S), AUTHORIZED REPRESENTATIVE OR PRODUCER, AND THE CERTIFICATE HOLDER.

IMPORTANT: If the certificate holder is an ADDITIONAL INSURED, the policy(ies) must have ADDITIONAL INSURED provisions or be endorsed. If SUBROGATION IS WAIVED, subject to the terms and conditions of the policy, certain policies may require an endorsement. A statement on this certificate does not confer rights to the certificate holder in lieu of such endorsement(s).

PRODUCER	CONTACT NAME:	
AP INTEGO, A SUBSIDIARY OF NEXT 375 Woodcliff Drive Suite 103 Fairport, NY 14450	PHONE (A/C, No, Ext):	FAX (A/C, No):
	E-MAIL ADDRESS:	

INSURER(S) AFFORDING COVERAGE	NAIC #
INSURER A : NorGUARD Insurance Company	31470
INSURER B :	
INSURER C :	
INSURER D :	
INSURER E :	
INSURER F :	

INSURED
JRSR LLC
DBA/TA Exquisite Lawn Care
52 Riley Rd # 402
Celebration, FL 34747-5420

COVERAGES **CERTIFICATE NUMBER:** **REVISION NUMBER:**

THIS IS TO CERTIFY THAT THE POLICIES OF INSURANCE LISTED BELOW HAVE BEEN ISSUED TO THE INSURED NAMED ABOVE FOR THE POLICY PERIOD INDICATED. NOTWITHSTANDING ANY REQUIREMENT, TERM OR CONDITION OF ANY CONTRACT OR OTHER DOCUMENT WITH RESPECT TO WHICH THIS CERTIFICATE MAY BE ISSUED OR MAY PERTAIN, THE INSURANCE AFFORDED BY THE POLICIES DESCRIBED HEREIN IS SUBJECT TO ALL THE TERMS, EXCLUSIONS AND CONDITIONS OF SUCH POLICIES. LIMITS SHOWN MAY HAVE BEEN REDUCED BY PAID CLAIMS.

INSR LTR	TYPE OF INSURANCE	ADDL INSD	SUBR WVD	POLICY NUMBER	POLICY EFF (MM/DD/YYYY)	POLICY EXP (MM/DD/YYYY)	LIMITS	
	COMMERCIAL GENERAL LIABILITY						EACH OCCURRENCE	$ 0
	☐ CLAIMS-MADE ☐ OCCUR						DAMAGE TO RENTED PREMISES (Ea occurrence)	$ 0
							MED EXP (Any one person)	$ 0
	GEN'L AGGREGATE LIMIT APPLIES PER:						PERSONAL & ADV INJURY	$ 0
	☐ POLICY ☐ PRO-JECT ☐ LOC						GENERAL AGGREGATE	$ 0
	OTHER:						PRODUCTS - COMP/OP AGG	$ 0
								$
	AUTOMOBILE LIABILITY						COMBINED SINGLE LIMIT (Ea accident)	$
	☐ ANY AUTO						BODILY INJURY (Per person)	$
	☐ OWNED AUTOS ONLY ☐ SCHEDULED AUTOS						BODILY INJURY (Per accident)	$
	☐ HIRED AUTOS ONLY ☐ NON-OWNED AUTOS ONLY						PROPERTY DAMAGE (Per accident)	$
								$
	☐ UMBRELLA LIAB ☐ OCCUR						EACH OCCURRENCE	$
	☐ EXCESS LIAB ☐ CLAIMS-MADE						AGGREGATE	$
	☐ DED ☐ RETENTION $							$
A	WORKERS COMPENSATION AND EMPLOYERS' LIABILITY ANYPROPRIETOR/PARTNER/EXECUTIVE OFFICER/MEMBER EXCLUDED? (Mandatory in NH) Y/N: Y If yes, describe under DESCRIPTION OF OPERATIONS below	N/A		JRWC445556	07/19/2023	07/19/2024	X PER STATUTE ☐ OTH-ER	
							E.L. EACH ACCIDENT	$ 1,000,000
							E.L. DISEASE - EA EMPLOYEE	$ 1,000,000
							E.L. DISEASE - POLICY LIMIT	$ 1,000,000

DESCRIPTION OF OPERATIONS / LOCATIONS / VEHICLES (ACORD 101, Additional Remarks Schedule, may be attached if more space is required)

Employees: Full Time: 6; Part Time: 6 Governing Class Description: LAWN MAINTENANCE-COM'L OR DOMESTIC
Exclusions:
Sven Rasmussen, Member;

CERTIFICATE HOLDER

Celebration Residential Owners Associations C/O Grar
P.O. Box 803555
Dallas, TX 75380

CANCELLATION

SHOULD ANY OF THE ABOVE DESCRIBED POLICIES BE CANCELLED BEFORE THE EXPIRATION DATE THEREOF, NOTICE WILL BE DELIVERED IN ACCORDANCE WITH THE POLICY PROVISIONS.

AUTHORIZED REPRESENTATIVE: David D. Smith

© 1988-2015 ACORD CORPORATION. All rights reserved.

The ACORD name and logo are registered marks of ACORD

CERTIFICATE OF LIABILITY INSURANCE

DATE (MM/DD/YYYY): 06/30/2023

THIS CERTIFICATE IS ISSUED AS A MATTER OF INFORMATION ONLY AND CONFERS NO RIGHTS UPON THE CERTIFICATE HOLDER. THIS CERTIFICATE DOES NOT AFFIRMATIVELY OR NEGATIVELY AMEND, EXTEND OR ALTER THE COVERAGE AFFORDED BY THE POLICIES BELOW. THIS CERTIFICATE OF INSURANCE DOES NOT CONSTITUTE A CONTRACT BETWEEN THE ISSUING INSURER(S), AUTHORIZED REPRESENTATIVE OR PRODUCER, AND THE CERTIFICATE HOLDER.

IMPORTANT: If the certificate holder is an ADDITIONAL INSURED, the policy(ies) must have ADDITIONAL INSURED provisions or be endorsed. If SUBROGATION IS WAIVED, subject to the terms and conditions of the policy, certain policies may require an endorsement. A statement on this certificate does not confer rights to the certificate holder in lieu of such endorsement(s).

PRODUCER	CONTACT NAME:	
Next First Insurance Agency, Inc. PO Box 60787 Palo Alto, CA 94306	PHONE (A/C, No, Ext): (855) 222-5919	FAX (A/C, No):
	E-MAIL ADDRESS: support@nextinsurance.com	

INSURER(S) AFFORDING COVERAGE		NAIC #
INSURER A :	Next Insurance US Company	16285
INSURER B :		
INSURER C :		
INSURER D :		
INSURER E :		
INSURER F :		

INSURED
JRSR LLC DBA Exquisite Lawn Care
6905 Greengrove Blvd
Clermont, FL 34714

COVERAGES **CERTIFICATE NUMBER:** 709045704 **REVISION NUMBER:**

THIS IS TO CERTIFY THAT THE POLICIES OF INSURANCE LISTED BELOW HAVE BEEN ISSUED TO THE INSURED NAMED ABOVE FOR THE POLICY PERIOD INDICATED. NOTWITHSTANDING ANY REQUIREMENT, TERM OR CONDITION OF ANY CONTRACT OR OTHER DOCUMENT WITH RESPECT TO WHICH THIS CERTIFICATE MAY BE ISSUED OR MAY PERTAIN, THE INSURANCE AFFORDED BY THE POLICIES DESCRIBED HEREIN IS SUBJECT TO ALL THE TERMS, EXCLUSIONS AND CONDITIONS OF SUCH POLICIES. LIMITS SHOWN MAY HAVE BEEN REDUCED BY PAID CLAIMS.

INSR LTR	TYPE OF INSURANCE	ADDL INSD	SUBR WVD	POLICY NUMBER	POLICY EFF (MM/DD/YYYY)	POLICY EXP (MM/DD/YYYY)	LIMITS	
A	X COMMERCIAL GENERAL LIABILITY CLAIMS-MADE X OCCUR GEN'L AGGREGATE LIMIT APPLIES PER: X POLICY PRO-JECT LOC OTHER:			NXTX79FJFT-00-GL	06/30/2023	06/30/2024	EACH OCCURRENCE DAMAGE TO RENTED PREMISES (Ea occurrence) MED EXP (Any one person) PERSONAL & ADV INJURY GENERAL AGGREGATE PRODUCTS - COMP/OP AGG $	$1,000,000.00 $100,000.00 $10,000.00 $1,000,000.00 $1,000,000.00 $1,000,000.00 $
	AUTOMOBILE LIABILITY ANY AUTO OWNED AUTOS ONLY HIRED AUTOS ONLY SCHEDULED AUTOS NON-OWNED AUTOS ONLY						COMBINED SINGLE LIMIT (Ea accident) BODILY INJURY (Per person) BODILY INJURY (Per accident) PROPERTY DAMAGE (Per accident) $	$ $ $ $ $
	UMBRELLA LIAB OCCUR EXCESS LIAB CLAIMS-MADE DED RETENTION $						EACH OCCURRENCE AGGREGATE $	$ $ $
	WORKERS COMPENSATION AND EMPLOYERS' LIABILITY ANYPROPRIETOR/PARTNER/EXECUTIVE OFFICER/MEMBER EXCLUDED? Y/N (Mandatory in NH) If yes, describe under DESCRIPTION OF OPERATIONS below	N/A					PER STATUTE OTH-ER E.L. EACH ACCIDENT E.L. DISEASE - EA EMPLOYEE E.L. DISEASE - POLICY LIMIT	 $ $ $
A	Contractors Errors and Omissions			NXTX79FJFT-00-GL	06/30/2023	06/30/2024	Each Occurrence: Aggregate:	$10,000.00 $20,000.00

DESCRIPTION OF OPERATIONS / LOCATIONS / VEHICLES (ACORD 101, Additional Remarks Schedule, may be attached if more space is required)

Proof of Insurance.

CERTIFICATE HOLDER

JRSR LLC DBA Exquisite Lawn Care
6905 Greengrove Blvd
Clermont, FL 34714

LIVE CERTIFICATE

Click or scan to view

CANCELLATION

SHOULD ANY OF THE ABOVE DESCRIBED POLICIES BE CANCELLED BEFORE THE EXPIRATION DATE THEREOF, NOTICE WILL BE DELIVERED IN ACCORDANCE WITH THE POLICY PROVISIONS.

AUTHORIZED REPRESENTATIVE

Ann Ryan

© 1988-2015 ACORD CORPORATION. All rights reserved.

The ACORD name and logo are registered marks of ACORD

Technical Certificate

presented to

Brian M. Causey

For satisfactorily completing the requirements for a certificate in:

Landscape and Horticulture Specialist

January 14, 2010
Date

President, Valencia Community College

FNGLA®
CERTIFIED PROFESSIONAL
HORTICULTURE

The Florida Nursery, Growers & Landscape Association
Confers on

Brian Causey
H06913

The Title of
FNGLA Certified Horticulture Professional (FCHP)

Expiration Date: 06/30/2026
Certified Since: 7/1/2020

Phil Buck, FNGLA President

Merry Mott, FNGLA Certification Director

UF IFAS
UNIVERSITY of FLORIDA

Certificate of Training
Best Management Practices
Florida Green Industries

GV400744-1
Certificate #

GV400744
Trainee ID #

The undersigned hereby acknowledges that

Brian M. Causey

has successfully met all requirements necessary to be fully trained through the Green Industries Best Management Practices Program developed by the Florida Department of Environmental Protection with the University of Florida Institute of Food and Agricultural Sciences.

Issuer	D. Rainey	1/8/2017	DEP Program Administrator
	Instructor	Date of Class	

Not valid without seal

Form **W-9**
(Rev. March 2024)
Department of the Treasury
Internal Revenue Service

Request for Taxpayer Identification Number and Certification

Go to *www.irs.gov/FormW9* for instructions and the latest information.

Give form to the requester. Do not send to the IRS.

Before you begin. For guidance related to the purpose of Form W-9, see *Purpose of Form*, below.

Print or type. See *Specific Instructions* on page 3.

1 Name of entity/individual. An entry is required. (For a sole proprietor or disregarded entity, enter the owner's name on line 1, and enter the business/disregarded entity's name on line 2.)

2 Business name/disregarded entity name, if different from above.

3a Check the appropriate box for federal tax classification of the entity/individual whose name is entered on line 1. Check only **one** of the following seven boxes.

☐ Individual/sole proprietor ☐ C corporation ☐ S corporation ☐ Partnership ☐ Trust/estate

☐ LLC. Enter the tax classification (C = C corporation, S = S corporation, P = Partnership) . . . . .

Note: Check the "LLC" box above and, in the entry space, enter the appropriate code (C, S, or P) for the tax classification of the LLC, unless it is a disregarded entity. A disregarded entity should instead check the appropriate box for the tax classification of its owner.

☐ Other (see instructions)

4 Exemptions (codes apply only to certain entities, not individuals; see instructions on page 3):

Exempt payee code (if any)

Exemption from Foreign Account Tax Compliance Act (FATCA) reporting code (if any)

(Applies to accounts maintained outside the United States.)

3b If on line 3a you checked "Partnership" or "Trust/estate," or checked "LLC" and entered "P" as its tax classification, and you are providing this form to a partnership, trust, or estate in which you have an ownership interest, check this box if you have any foreign partners, owners, or beneficiaries. See instructions . . . . . ☐

5 Address (number, street, and apt. or suite no.). See instructions.

Requester's name and address (optional)

6 City, state, and ZIP code

7 List account number(s) here (optional)

Part I Taxpayer Identification Number (TIN)

Enter your TIN in the appropriate box. The TIN provided must match the name given on line 1 to avoid backup withholding. For individuals, this is generally your social security number (SSN). However, for a resident alien, sole proprietor, or disregarded entity, see the instructions for Part I, later. For other entities, it is your employer identification number (EIN). If you do not have a number, see *How to get a TIN*, later.

Note: If the account is in more than one name, see the instructions for line 1. See also *What Name and Number To Give the Requester* for guidelines on whose number to enter.

Social security number

			–			–				

or

Employer identification number

2	7	–	2	7	7	4	7	9	7

Part II Certification

Under penalties of perjury, I certify that:

1. The number shown on this form is my correct taxpayer identification number (or I am waiting for a number to be issued to me); and
2. I am not subject to backup withholding because (a) I am exempt from backup withholding, or (b) I have not been notified by the Internal Revenue Service (IRS) that I am subject to backup withholding as a result of a failure to report all interest or dividends, or (c) the IRS has notified me that I am no longer subject to backup withholding; and
3. I am a U.S. citizen or other U.S. person (defined below); and
4. The FATCA code(s) entered on this form (if any) indicating that I am exempt from FATCA reporting is correct.

Certification instructions. You must cross out item 2 above if you have been notified by the IRS that you are currently subject to backup withholding because you have failed to report all interest and dividends on your tax return. For real estate transactions, item 2 does not apply. For mortgage interest paid, acquisition or abandonment of secured property, cancellation of debt, contributions to an individual retirement arrangement (IRA), and, generally, payments other than interest and dividends, you are not required to sign the certification, but you must provide your correct TIN. See the instructions for Part II, later.

Sign Here **Signature of U.S. person** [signature] **Date** 04·03·2024

General Instructions

Section references are to the Internal Revenue Code unless otherwise noted.

Future developments. For the latest information about developments related to Form W-9 and its instructions, such as legislation enacted after they were published, go to *www.irs.gov/FormW9*.

What's New

Line 3a has been modified to clarify how a disregarded entity completes this line. An LLC that is a disregarded entity should check the appropriate box for the tax classification of its owner. Otherwise, it should check the "LLC" box and enter its appropriate tax classification.

New line 3b has been added to this form. A flow-through entity is required to complete this line to indicate that it has direct or indirect foreign partners, owners, or beneficiaries when it provides the Form W-9 to another flow-through entity in which it has an ownership interest. This change is intended to provide a flow-through entity with information regarding the status of its indirect foreign partners, owners, or beneficiaries, so that it can satisfy any applicable reporting requirements. For example, a partnership that has any indirect foreign partners may be required to complete Schedules K-2 and K-3. See the Partnership Instructions for Schedules K-2 and K-3 (Form 1065).

Purpose of Form

An individual or entity (Form W-9 requester) who is required to file an information return with the IRS is giving you this form because they

BRUCE VICKERS, TAX COLLECTOR
OSCEOLA COUNTY, STATE OF FLORIDA
LOCAL BUSINESS TAX RECEIPT

EXPIRATION
SEPTEMBER 30, 2024

ACCOUNT NO.
87656

2024

BUSINESS TYPE:
4190 LAWN CARE/LANDSCAPE

09/26/2023
Oper N/A
Till Internet
Paid 30.00
Rcpt.#055296

4190-87656	
TRANSFER	0.00
ORIGINAL TAX	30.00
AMOUNT	0.00
PENALTY	0.00
COLLECTION COST	0.00
TOTAL	30.00

BUSINESS:
Exquisite Lawn Care
JRSR, LLC
Contact: Sven Rasmussen
6905 Green Grove Blvd.
Clermont, FL 34714

Location:
OUT OF COUNTY

GV400744-1 (Brian Causey)

Bruce E. Vickers

BRUCE VICKERS CFC, TAX COLLECTOR
P.O. BOX 422105, KISSIMMEE FL 34742-2105
407-742-4000

THIS RECEIPT IS IN ADDITION AND NOT IN LIEU OF ANY OTHER LICENSE REQUIRED BY LAW OR MUNICIPAL ORDINANCE AND IS SUBJECT TO REGULATIONS OF ZONING, HEALTH, AND ANY OTHER LAWFUL AUTHORITY.

THIS LOCAL BUSINESS TAX RECEIPT IS FURNISHED PURSUANT TO CHAPTER 205 LAWS OF FLORIDA AND OSCEOLA COUNTY ORDINANCE 95-10, AS AMENDED

The law requires this Local Business Tax Receipt to be displayed conspicuously at the place of business in such manner that it can be open to the view of the public and subject to inspection by all duly authorized officers of the County.

Pursuant to State Law, all Local Business Tax Receipts shall expire on September 30th of the succeeding year. Those Local Business Tax Receipts renewed beginning October 1st shall be delinquent and subject to a delinquency penalty of 10% for the month of October, plus an additional 5% penalty for each month of delinquency thereafter until paid; provided that the total delinquency penalty shall not exceed 25% of the Local Business Tax Receipt for the delinquent establishment. A 25% penalty shall be imposed on any person engaged in any new business, occupation or profession without first obtaining an Osceola County Local Business Tax Receipt. PLUS: if delinquent more than 150 days, subject to civil actions and penalties, and a penalty of up to $250.

This receipt is a Local Business Tax only. It does not permit the Local Business Taxpayer to violate any existing regulatory or zoning laws of the state, county, or cities, nor does it exempt the licensee from any other license or permits that may be required by law.

This form becomes a receipt when validated by the Tax Collector. Note: Display in accordance with the county ordinance. Local Business Tax Receipts are subject to change according to law.

Sven Rasmussen
6905 Green Grove Blvd.
Clermont, Fl 34714

REQUEST FOR PROPOSAL FOR LANDSCAPING PARKS AND FACILITIES

RFP # PARKS2-03102023

Celebration Residential Owners Association

Issued by:

CELEBRATION RESIDENTIAL OWNERS' ASSOCIATION, INC.
(CROA) BOARD OF DIRECTORS

851 CELEBRATION AVE
CELEBRATION, FLORIDA 34747

JEFFREY WEBB, COMMUNITY MANAGER
BRAYAN SENQUIS, DIRECTOR OF PARKS AND FACILITIES

407-566-1200

CELEBRATION.FL.US

Date Issued: Friday March 15th, 2024.

Due Date/Time: Friday, April 5th, 2024, at 3:00 PM

Celebration Residential Owners Association (CROA)

BID RESPONSE FORM

Name of Firm Submitting Proposal:

JRSR LLC dba Exquisite Lawn Care

(Print or Type)

Name of Person Submitting Proposal:

Brian Causey

(Print or Type)

Email of Person Submitting Proposal:

brian@exquisitelawncare.com

(Print or Type)

Phone of Person Submitting Proposal:

407 719 5944

(Print or Type)

I __Brian Causey_____, on behalf of __Exquisite Lawn Care_____, submit the following bids as indicated below:

Parks	Address	Monthly Cost
Lakeside	631 Sycamore Street	$3700
The Commons	216 Celebration Blvd	$3000
North Village Pavilion	210 Celebration Blvd	$3000
Meeting Room	631 Sycamore Street	$1250
Spring Park	951 Spring Park Street	$4500
East Village Playground	820 Oak Shadows Road	$250
Longmeadow Park	503 Longmeadow street	$3300
Large Dog Park	310 Campus Street	$3500
East Village Amenity Center	820 Oak Shadows Road	$2200
Standard Tree Trimming (If Applicable)		Inc. up to 12'
Pest Control & Fertilization		$960
Mulch Replacement – As Needed		$9/unit
Refuse Disposal		Included
Bi-Annual Mulch Costs		$33620

Celebration Village	Address	Monthly Cost
Founders Park	583 Campus Street	$3500
Savannah Square	732 Mulberry Ave	$675
Refuse Disposal		Included
Standard Tree Trimming (If Applicable)		Inc. up to 12'
Mulch Replacement – As Needed		$9/unit
Bi-Annual Mulch Costs		$6104
Pest Control & Fertilization		$155

South Village	Address	Monthly Cost
Central Bark	915 Pawstand Road	$875
Refuse Disposal		Included

This document must be completed and returned with your submittal.

Standard Tree Trimming (If Applicable)		Inc. up to 12'
Mulch Replacement – As Needed		$9/unit
Bi-Annual Mulch Costs		$1500
Pest Control & Fertilization		$65

Roseville Corner	**Monthly Cost**	
Nash Park	1028 Nash Drive	$650
Refuse Disposal		Included
Standard Tree Trimming (If Applicable)		Inc. up to 12'
Mulch Replacement – As Needed		$9/unit
Bi-Annual Mulch Costs		$2520
Pest Control & Fertilization		$50

East Village		**Monthly Cost**
Aquila Loop	1216 Aquila Loop	$1475
Greenlawn	928 Greenlawn	$650
The Greens Recreation Area	830 Oak Shadows Road	$3150
Blue Sage	900 Blue Sage Street	$225
Eastlawn	731 East Lawn Drive	N/A
Refuse Disposal		Included
Standard Tree Trimming (If Applicable)		Inc. up to 12'
Bi-Annual Mulch Costs		$10560
Pest Control & Fertilization		$330
Mulch Replacement – As Needed		$9/unit

Artisan Park		**Monthly Cost**
Craftsman	1400 Craftsman Ave	$2500
Bocci	1414 Craftsman Ave	$2500
Amphitheater	1180 Wilde Drive	$3500
Mulch Replacement – As Needed		$9/unit
Refuse Disposal		Included
Standard Tree Trimming (If Applicable)		Inc. up to 12'
Bi-Annual Mulch Costs		$10175
Pest Control & Fertilization		$210

Island Village		**Monthly Cost**
Island Village Amenity Center	1831 Island Village Way	$875
Gathering Green	7484 Estuary Lake Loop	$350
Beach Ridge Wedge	1843 Island Village Way	$185
Beach Ridge Mews	1841 Beach Ridge Road	$225
Olmstead Mews	2257 Celebration Blvd	$845

This document must be completed and returned with your submittal.

Magnolia Square	7401 Inlet Point Celebration	$875
Mulch Replacement – As Needed		$9/unit
Refuse Disposal		Included
Standard Tree Trimming (If Applicable)		Inc. up to 12'
Bi-Annual Mulch Costs		$11340
Pest Control & Fertilization		$425

Explanation Key.

- Mulch Costs: There should be two (2) costs related to mulch replacement. Bi-Annual, which will include mulch adding in the fall and spring and mulch replacement as needed to fill in monthly.
- Refuse Disposal: Leaves, replacement sod, and replacement plants disposal costs should be included in this expense area.
- Standard Tree Trimming: Some parks will require trimming of trees over sidewalks or areas where residents may congregate. Easement trees should not be included in this expense area as they are not the responsibility of the HOA. (CROA).

Executed by:

Signature	04/03/2024 **Date**
BrianCausey **Agent Name**	General Manager **Agent Title**

This document must be completed and returned with your submittal.

BID RESPONSE FORM

Company Name: JRSR LLC dba Exquisite Lawn Care Contact: Brian Causey
Email: brian@exquisitelawncare.com Phone: 407 719 5944

I Brian Causey, on behalf of Exquisite Lawn Care, submit the following bids as indicated below:

- [X] **Parks and Facilities**
- [ ]
- [ ]

NOTE(S):
When completing your proposal, do not attach any forms which may contain terms and conditions that conflict with those listed in CROA's proposal documents. Inclusion of additional terms and conditions such as those which may be on your company's standard forms may result in your proposal being declared non-responsive.

All price information to be used in the RFP evaluation must be on this proposal form.

CROA reserves the right to adjust any quantity upward or downward as may be warranted or necessary.

"The undersigned, as Proposer, hereby declares that he/she has informed himself/herself fully regarding all conditions for the work to be done and that he/she has examined the RFP and Specifications for the work and comments hereto attached. The Proposer agrees, if this proposal is accepted, to contract with CROA in the form of an Agreement, to furnish all necessary materials, equipment, machinery, tools, apparatus, means of transportation, labor, and service necessary to complete the work covered by the RFP and Contract Documents for this Project. The Proposer agrees to accept in full compensation for each item the prices named in the schedules incorporated herein.

Proposer agrees to supply the products or services at the prices proposed above per the terms, conditions, and specifications contained in this RFP."

Executed by:

Brian Causey	General Manager		04/03/2024
Agent Name	Title	Signature	Date

This document must be completed and returned with your Submittal.

DISCLOSURE OF SUBCONTRACTORS AND SUPPLIERS

Name of Firm Submitting Proposal:

JRSR LLC dba Exquisite Lawn Care

(Print or Type)

Name of Person Submitting Proposal:

Brian Causey

(Print or Type)

Name of Firm Submitting Proposal:

(Print or Type)

Name of Person Submitting Proposal:

(Print or Type)

Please list all Subcontractors and Suppliers to be used in connection with the performance of this contract. Attach additional sheets as necessary.

Name of Firm or Agency: Address: Quality Plants 8180 Millinockett Lane Orlando, FL 32825	Telephone: 407 683 8251
Contact Name: Charles Felgar	Title: Sales associate

This document must be completed and returned with your Submittal.

Name of Firm or Agency: Address: Everglades Equipment Group 12049 South Orange Blossom Trail Orlando, FL 32837	Telephone: 407 240 1023
Contact Name: Jeremias	Title: Sales Associate

Name of Firm or Agency: Address: Pest Patrol 700 Dyer Blvd Kissimmee, FL 34741	Telephone: 407 944 9445
Contact Name: Kyle Arzt	Title: General Manager

Name of Firm or Agency: Address: PTC Tree Work 3814 Swallowtail Lane Kissimmee, FL 34744	Telephone: 407 721 3357
Contact Name: Jose Gonzalez	Title: Owner

Name of Firm or Agency: Address: Sutton Hardscapes 4628 Harbour Village Blvd Unit 2303 Ponce Inlet, FL 32127	Telephone: 321 297 5127
Contact Name: Greg Dew	Title: Owner

This document must be completed and returned with your Submittal.

STATEMENT OF CONTRACTOR'S EXPERIENCE, EQUIPMENT AND PERSONNEL

(The contractor may also provide any supplemental company or personnel information that will assist CROA in evaluating your proposal such as a corporate organizational chart showing area of responsibility for personnel listed on this form).

CONTRACTOR: JRSR LLC dba Exquisite Lawn Care

DATE: 04/03/2024

1. How many years has your organization been in business as a landscape & irrigation contractor under your present business name?

   14 Years

2. List all previous business names of your organization:

3. How many years of experience in landscape and irrigation installation?

   Prime Contractor: 26 Years

   Subcontractor: 38 Years

4. List all officers and directors of your organization:

Name	Position Held
Sven Rasmussen	Owner/President
Brian Causey	General Manager
Rachel Causey	Office Manager

5. Have you ever failed to complete any work awarded to you in the last 3 years? ____ Yes X No

   If yes, where and why?

This document must be completed and returned with your Submittal.

EXPERIENCE

1. Describe any experience of the principal individuals (Foremen, Superintendents, etc.) who are responsible for the actual landscape & irrigation installation work of your organization?

Brian Causey	General Manager	
Name	Position	
Lawn Maintenance/Landscaping/Irrigation/Horticulture	26	14
Type of Work	Years' Experience	Years with Firm

Nathanial Gracia	Landscape Supervisor	
Name	Position	
Irrigation/Landscape Management	10	8
Type of Work	Years' Experience	Years with Firm

Giovanny Negron	Commercial Lawn Maintenance Supervisor	
Name	Position	
Commercial Lawn Maintenance/Landscaping/Irrigation	7	7
Type of Work	Years' Experience	Years with Firm

Douglas Gilliam	Commercial Lawn Maintenance Senior Foreman	
Name	Position	
Commercial Lawn Maintenance/Landscaping/Irrigation	20	10
Type of Work	Years' Experience	Years with Firm

2. List/describe five (5) landscape and irrigation contracts/projects of similar size and scope that you currently have or have recently completed.

Project: CROA Spring Lake Garden Homes, Town Homes Mews and Pool Facility. Location: Celebration, FL

Date: January 2021 - Current Contract Amount: $304,546.80

Contract Name, Phone Number, Fax Number:

Rose Vazquez 407 566 1200 Ext 2232

This document must be completed and returned with your Submittal.

Project: CROA Passive Parks & Town Hall	Location: Celebration, FL
Date: June 2022 - Current	Contract Amount: $420,360.00
Contract Name, Phone Number, Fax Number: Brayan Senquis 407 566 1200 Ext 208	

Project: Celebration Town Center/Lake Nona Commons	Location: Celebration & Lake Nona, FL
Date: 2021 - Current	Contract Amount: $79,140.00
Contract Name, Phone Number, Fax Number: Janice Payne 407 566 4007	

Project: Mirasol At Celebration	Location: Celebration, FL
Date: October 2023 - Current	Contract Amount: $46,200.00
Contract Name, Phone Number, Fax Number: Mauricio Muela 407 566 0551	

Project: Infinity Park, Orlando Irrigation Install, sod install, large tree install, mulch install	Location: John Young Pkwy & Consulate, Orlando, FL
Date: January 2020 - June 2020	Contract Amount: $225,000
Contract Name, Phone Number, Fax Number: Tavistock Development Company 407 313 8233	

	Location:
Date:	Contract Amount:
Contract Name, Phone Number, Fax Number:	

This document must be completed and returned with your Submittal

EQUIPMENT & MATERIAL RESOURCES

List equipment owned (types and number of). A separate list is acceptable (i.e. spreadsheet).

1. 4 x Ram 2500	9. 1 X Stump Grinder
2. 4 X Chevy Colarado	10. 1 X Sod Cutter
3. 3 X Utility Vehicle	11. 1 X Packer
4. 3 X Dump Trailer	12. 14 x Backpack Blower
5. 2 X Enclosed Trailer	13. 10 X Edger
6. 5 X Open Trailer	14. 10 X Line Trimmer
7. 12 X Commercial Mower	15. 10 X Hedge Trimmer
8. 1 X Squid Steer With Attachments	16. 6 X Chain Saws

CONTRACTOR'S AFFIDAVIT

State of Florida
County of Osceola

Before me appeared Brian Causey who (title) is owner of *(the company described herein)* Exquisite lawn care being duly sworn deposes and say that the foregoing statements are a true and accurate statement of the position of the said organization as of the date thereof, and, that the statements and answers to the foregoing experience questionnaire are correct and true as of the date of this affidavit; and, that he/she understands that intentional inclusion of false, deceptive, or fraudulent statements of this application constitutes fraud; and, agrees to furnish any pertinent information requested by CROA deemed necessary to verify the statements made in this application or regarding the ability, standing and general reputation of the applicant.

Personally Known___or Produced Identification FLDL

Sworn to and subscribed before me this 4th day of, 2024

Rodney Kleth Thomas
Notary Public
State of Florida
Comm# HH058000
Expires 10/28/2024

Rodney Kleth Thomas
NOTARY PUBLIC – STATE of FLORIDA
(Signature of Notary Public)

Rodney Kleth Thomas
(Print Name of Notary Public)

This document must be completed and returned with your Submittal.

"Exhibit A" LANDSCAPE

SCOPE OF SERVICES

SCOPE OF WORK

The scope of work consists of complete landscape, turf, irrigation, and specialty maintenance of specified parks & facilities, within Celebration. The work consists of turf maintenance, weeding and edging of ground cover, preventing, and controlling weeds in turf, planters, and hardscape, trimming of shrubs, application of pesticides, hardscape areas, Trash collection and disposal, and other activities normally associated with full-service maintenance of parks, recreational facilities and residential single-family units.

CROA reserves the right to award contracts for all work that requires a separate bid process based on the nature of the work and its anticipated costs.

The contractor shall have a period of thirty (30) days from the date of commencement to perform a thorough audit of all turf, plant material, beds, planters, hardscape, and irrigation systems. A report listing all items that do not meet the specifications of this Scope of Work must be submitted to the CROA Representative.

Deficiencies noted within the report will be reviewed by the CROA Representative for verification and actions required. Upon approval by the CROA Representative, either the deficiencies will be corrected or documented to not become the responsibility of the Contractor to address them without additional compensation.

After the thirty (30) day audit period has expired and for the duration of the contract, the Contractor shall assume responsibility for all unreported maintenance deficiencies, including materials and labor.

WORK SCHEDULE

The Contractor shall accomplish all normal work required under this contract between the hours of 7:00 a.m. and 7:00 p.m., Monday through Friday. The CROA Representative may grant, on an individual basis, permission to perform contract maintenance at other hours. No maintenance functions shall commence before 7:00 a.m. and after 7:00 p.m.

Work will be scheduled so that it will not disrupt the functions and normal day-to-day operations of the parks and the facilities located within them.

No work will be performed on weekends without prior written approval of the CROA Representative.

The contractor will be required to provide maintenance at a specific time at certain locations such as parks and sports fields located within the K-8 school facility.

The Contractor shall provide the CROA Representative with monthly calendar work schedules 5 days before the 1st day of each month. Schedules must include the name of the Supervisor(s) who will oversee the work performed and the telephone number(s) by which to contact him/her.

4/3/2024

The work schedules must reflect adequate time for completion of all routine work activities on a daily, weekly, and monthly basis, as well as seasonal work activities on an annual basis which comply with the specification requirements indicated throughout this document. The schedule shall also indicate any special work assignments i.e., pesticide application, tree trimming, plant/turf replacement, mulching, etc.

Failure to submit schedules within the time frame specified shall result in a penalty of $100 per occurrence, per schedule for each calendar day until schedules are received.

The contractor shall complete all work during the calendar week in which it is scheduled unless circumstances occur that are beyond the control of the Contractor and approved by the CROA Representative. All scheduled work NOT completed during the week shall be reported to the CROA Representative in writing by 4:00 PM Friday of the same week.

PROJECT CATEGORIES

PARKS & FACILITIES

Reference Project Category "PARKS & FACILITIES" for site-specific maintenance requirements.

TERM OF CONTRACT

The term of this Agreement shall be May 1st, 2024, through April 30th, 2027, with the option to renew for two (2) additional one (1) year periods. The prices proposed by the Contractor shall remain fixed and firm for the duration of the Agreement.

Before each renewal period, the Contractor will be evaluated based on their performance.

The landscape maintenance contractor shall be responsible for all labor, materials, and equipment necessary for the proper care and maintenance of the landscaping, irrigation, and related park details and landscaping systems as outlined within this scope.

The following specifications are set as the minimum to achieve the desired healthy and attractive landscaping within the community.

OPERATIONS AND COMMUNICATIONS

SITE CLEANLINESS AND CONDITION

As much as possible, all areas shall be kept free of litter, landscape, and or construction debris. It is expected that during the routine performance of the different maintenance operations the Contractor and workers are to be aware of site conditions and keep a neat and clean appearance. Cleanup of trash and debris shall be performed 5 days per week throughout the year.

SAFETY

All Contractor and Subcontractor personnel shall wear personal protective equipment in the performance of their duties including safety vests, protective eyewear or face shields, respiratory protection as necessary, gloves, and protective clothing.

The contractor shall be responsible for adhering to all local, state, and federal safety guidelines and observe all

safety precautions when performing services on CROA property, roadways and rights-of-way to include safe location of parked vehicles, use of safety cones, signage, flag personnel as necessary, use of safety vests on all personnel and vehicles which are clearly identifiable as belonging to the Contractor.

MEETINGS

The Contractor shall meet with the CROA Representative as appropriate, **every week.** Those meetings shall serve as a forum for the exchange of information, identification of pertinent and critical issues, determination of an action plan and schedule for resolving those issues, review of schedule, and discussion of other landscape, irrigation and maintenance-related issues deemed appropriate by the CROA Representative or the Contractor. The CROA Representative shall provide the meeting location.

The contractor shall provide a representative to attend the monthly meeting of the CROA Board of Directors meetings and shall be able to respond to any questions the Board may have as to the day-to-day activities at the Project site under this Scope of Work.

QUALITY CONTROL

The CROA Representative, or his designated representative, shall be the sole judge as to the adequacy and quality of maintenance. To ensure consistent quality of the work being performed, the CROA Representative may inspect all areas covered by this contract within 24 hours after work is scheduled to be performed. Any deficiencies shall be recorded and submitted to the Contractor for review and corrective action. After the correction period allowed has passed, the CROA Representative shall re-inspect the deficient work and any deficiencies not corrected shall result in the value of the work deducted from the monthly payment to the Contractor. The bid prices quoted by the Contractor unit pricing and/or Extra Work Pricing Sheets shall be used to determine the dollar value of any deficiencies.

Within three (3) calendar days (72 hours) after being notified by the CROA Representative in writing of defective or unacceptable work, if the Contractor fails to correct such work, CROA may cause the unacceptable or defective work to be corrected. If CROA corrects the work, CROA shall be entitled to deduct from any monies due, or which may become due to the Contractor, the reasonable cost of remedying the defective or unacceptable work including an administration fee per occurrence. Provided, however, if the corrective work cannot reasonably be completed within such three (3) day period, and the Contractor immediately begins corrective work, and CROA.

reasonably determines that the Contractor is diligently pursuing the completion of such corrective work, CROA agrees to allow the Contractor to complete correction of the defective or unacceptable work. In addition, if the Contractor, for any reason, fails to perform any portion of the services required by the Contractor under this Agreement, CROA shall be entitled to deduct from any monies due or which may become due to the Contractor the actual expenditures that are necessary to complete the services not performed.

The Contractor will make **weekly in-person visual reviews** of the entire site with a focus on current conditions and the Contractor's performance. The Contractor will make repairs and adjustments on time.

REPORTS

A **Weekly Maintenance Report due each Friday by 4:00 PM** shall be generated by the Contractor and submitted via email to the CROA Representative outlining potential problem areas and the Contractor's proposed corrective action, upcoming work approval request, coordination, scheduling, etc.

The Contractor shall address MyCelebrationFl work orders, as submitted by residents and staff daily, and provide updates utilizing the MyCelebrationFl App.

SUBCONTRACTING

The Contractor may subcontract certain procedures or operations only with the written approval of CROA. Proof of proper licensing and insurance must be provided to CROA before final approval. The Contractor is held responsible for any work performed by any subcontractor engaged.

WORKFORCE

It is desired that the Contractor employees be dressed uniformly with the company identification. Vehicles should be easily identified as well. A neat and clean appearance should be maintained as much as possible.

Contractor employees should be instructed to be helpful and courteous to residents, other employees, and visitors.

As per Federal laws and guidelines, all Contractors must only employ individuals who are legally authorized to work in the United States of America. Any Contractor who enters into a contract with CROA hereby acknowledges that the Contractor only employs individuals who are legally authorized to work in the United States and to the extent that the Contractor is employing individuals who are not legally authorized to work in the United States, it is understood that CROA will not be responsible for any violations of Federal law and the Contractor, solely, will be responsible and liable for any violations and or penalties associated with such violation.

KEYS/ACCESS CARDS

CROA will issue keys and access cards as necessary for access to the work area. The contractor must assume full responsibility for theft or loss of said keys and cards and must pay for re-keying ALL locks operated by these keys or the replacement cost for access cards. Keys must not be duplicated.

LOST & FOUND

The contractor must ensure that articles found by its employees and/or subcontractors are returned to the CROA Representative or Town Hall upon discovery.

PARKING

Contractors' vehicles and trailers shall be parked where they do not impede traffic or visibility at an intersection, roundabout, or on a roadway. All necessary safety precautions are to be observed when the Contractor's personnel are working in or around roadways.

SUPERVISION

The Contractor shall provide supervision of all maintenance and or repair work being performed. Supervisors shall be able to communicate problems to the CROA Representative at any time and shall always be easily accessible to the Representative by cell phone. CROA shall be notified of any change in supervisory personnel immediately.

The Contractor shall provide a knowledgeable, experienced, and well-rounded dedicated maintenance supervisor to oversee each major CROA contract area or collection of areas ranging from $250,000 to $750,000 in yearly maintenance contract work.

A monthly walk-through with the CROA Representative shall be performed to cover work being accomplished, special needs or concerns, and other related information.

If needed, additional supervision or a change of supervisory personnel will be requested should contract performance fall below the acceptable standard.

A good working relationship with other maintenance contractors is to be established and maintained.

ADDITIONAL WORK

From time-to-time additional work may be requested of the Contractor by the CROA Representative. A cost estimate, schedule, or other determining information may be required before approval of the work is to be granted. Each situation will be considered on a case-by-case basis. All additional work shall be completed promptly.

CHANGES

It is expected that development growth will necessitate additional areas to be routinely maintained under the same specifications, or as amended by the CROA Representative. It is the intent to be able to add or delete areas as necessary with the related cost increases or decreases to be handled through the implementation of a change order approved by the CROA Representative. CROA does reserve the right to disapprove any changes. In such cases other contractors may be engaged for the change. Any changes shall be in writing to be legally binding on both parties. No payment shall be made for invoices that do not have written authorization so documented.

SATISFACTORY PERFORMANCE

It is estimated that the frequency and guidelines outlined in this Exhibit will provide the quality desired. However, in the event it does not, the Contractor agrees to provide such reasonable additional services without further compensation. Satisfactory performance of work under this contract shall be based on these maintenance specifications, as measured by the Owner at its discretion.

The determination of satisfactory performance will be based upon the satisfactory appearance of the grounds, not whether anticipated projections of cycle frequencies have been performed. The appearance and quality of the grounds will be reviewed periodically by the CROA Representative. Contractor performance will be evaluated and adjustments to the technical maintenance specifications, if required, will be made.

It is recognized that at times, the development of new areas will damage or deter the maintenance of existing areas. Seasonal weather differences may cause some variation in vegetation growth characteristics and different stages during the care cycle may vary from the desired appearance.

Any plant, tree, grass, or shrub that dies due to the Contractor's negligence shall be replaced by the Contractor, except in instances involving acts of God, theft, vandalism, or the negligence of others, in which case the plants may be replaced at the CROA Representatives direction at no additional cost to the Contractor. Such damage should be reported to the CROA Representative in the weekly report.

Any damage to walls, landscape, lighting, or hardscape features by the Contractor shall be repaired by the respective tradesmen initiated through the CROA Representative so all warranties remain effective. All billing for said repairs will be directed to the Contractor responsible for the said area and cost of repairs.

If the Contractor's performance falls below a level not acceptable by CROA standards, the Contractor will be graded on a scale from 0-3 where 0 is "Unacceptable" and 3 is "Excellent". If the Contractor scores below a two on the monthly audit, they have three business days to fix the unacceptable item. If the contractor scores an overall score of two or lower three times during the contract, an action plan of correction will be required which could lead to the potential cancelation of the contract. "Please find the inspection form utilized attached".

MAINTENANCE FOR VISIBILITY AND SAFETY

All landscaping shall be maintained in a manner that allows clear passage of vehicles and pedestrians, provides open visibility where necessary for safety, and does not obstruct lighting.

Clear visibility in both daytime and nighttime is of the utmost importance for parking areas, driveways, and intersections of all types.

Trees and shrubs shall not be allowed to grow into or over sidewalks, cart paths, public or private streets, driveways, or parking areas in any way that conflicts with the safe passage of pedestrians and vehicles.

A minimum of ten (10) feet of vertical clearance shall be maintained. This shall be increased to fifteen (15) feet where necessary for the passage of taller vehicles—such as vans, buses, or trucks—in areas that must be used by such vehicles.

In general, hedges and shrub masses shall be maintained at a maximum height of three (3) feet in all areas.

views must be maintained for the safety of vehicular and pedestrian traffic. However, the property owner shall visually inspect the site (doing so on a routine basis) to determine whether safe visibility requires maintenance at a lower height, in any given situation.

Individual plants or specimens that do not specifically impede safe visibility may conform to the other applicable standards of these specifications.

Trees near light poles shall be maintained as they grow to avoid impeding safe light levels, to the greatest extent possible.

Pruning of all landscaping shall comply with the proper techniques outlined in these specifications, based on the type of plant material. But in all cases, ensuring safe visibility shall be the prevailing objective.

Areas intended as open space enjoyment will be retained in their natural states and managed for fire protection, noxious weeds, and erosion control as appropriate for the intended use, and natural surroundings.

Prune and maintain all-natural vegetation five (5) feet from the edge of sports fields, turf, sidewalks, fence lines, and parking areas.

Where natural wooded areas adjoin the finished turf areas and landscape beds, a buffer zone of at least three (3) feet shall be maintained with herbicide and or mechanical means.

TURF MAINTENANCE

BAHIA, ST. AUGUSTINE & ZOYSIA TURF

Mowing of all Bahia, St. Augustine, and Zoysia turf areas shall be performed every week during the normal growing season (March through October). During the months of November through February, it is expected that mowing will be required twice a month unless abnormal conditions arise. In any event, the turf shall be mowed at a frequency to always promote healthy and continued growth as well as proper appearance.

BERMUDA TURF

Bermuda turf shall be cut two (2) times per week during the months of March through October and one (1) time per week from November through February unless abnormal conditions arise. The turf shall be mowed at a frequency to always promote healthy and continued growth as well as proper appearance.

REEL mowers MUST be used to maintain Bermuda Turf. There will be no exceptions to this requirement.

Mowing patterns shall be varied to minimize wear areas from tires and slippage.

Mowing height shall be based on season and what is horticultural correct for turf type and location.

Turf Type	Height (inches)	Frequency (per year)	Mower Type
Bahia grass	3.0 – 4.0	42	Rotary
Bermuda grass	0.5 - 1.5	88	Reel
St. Augustine grass	2.5 – 4.0	42	Rotary
Zoysia grass	1.5 - 2.5	42	Rotary

If a change in the height of the cut is considered, the CROA Representative must approve such change, in writing, before any height adjustment.
When line trimmers are used, cutting height shall be in conjunction with mowing height. Scalping by either trimmers or mowers will not be acceptable. Damage to trees, shrubs, and signposts is not acceptable.

Any unsightly clippings that remain on the turf, shall be removed after mowing.

Walkways, streets, and parking areas are to be blown or vacuumed free of clippings after each mowing.

LEAVES

If the Contractor is not using a mulching mower, at certain times of the year leaves in turf may need to be removed with a vacuum to avoid having them accumulate in areas of the turf, or get blown into beds, parking lots islands, or residential yards by the mowers. In areas with parking lots associated with landscape maintenance, leaves, and debris are to be either raked or removed with a vacuum. Leaves are not to be blown into landscape beds or down storm drains. If the condition of the turf declines due to failure to remove accumulated leaves promptly, the Contractor is responsible for replacing the turf.

LEAVES – SEASONAL

During the months of February through April leaves, acorns, and debris must be removed from all landscape beds, turf, and hardscape at all Parks, Facilities, and Sports Fields every week. The curbs and streets adjacent to each location are included as part of this scope. Removal by vacuum is preferred; however, raking, blowing, and manual removal will be allowed.

EDGING

All necessary edging operations shall be performed routinely to trim the turf and maintain a well-groomed appearance for all sidewalks, curbs, plant beds, drainage structures, irrigation valve boxes, splice boxes, gate valve boxes, water meter boxes, and other such interfaces between turf and different surfaces.

Bed lines shall be edged to conform to their original design intent, with adjustments being made periodically for the plant growth.

The edge shall occur in conjunction with each mowing cycle. Grass runners shall not exceed one inch in length along sidewalks, curbs, pavements, planting beds, and other such edges.

Upon completion of edging operations, the turf edge shall be neat, clean, and approximately ½ inch from the edge of any pavement, with a minimum depth of 2 inches.

All paved areas and mulched beds shall be free of dirt, clippings, and debris after work is completed.

DISEASE AND PEST CONTROL

All turf varieties shall be reasonably free of pest infestations, fungus, and disease. Regular inspections during normal maintenance operations shall be undertaken by qualified individuals to identify and respond to such conditions.

Proper fertilization, proper watering, and proper drainage shall be practiced promoting plant vigor and resistance to pests and disease.

Chemical application shall be used as appropriate to prevent damage, promote healthy and continued growth, and treat and cure identified problems. All use of chemicals shall comply with all applicable regulatory and safety standards and shall be applied by appropriately trained and licensed pest control specialists. **Areas treated shall have signs posted on all areas treated with chemicals to alert residents, especially those with children and pets.**

WEED CONTROL

Application of herbicides shall be done on a curative "as needed" basis. A pre-emerging herbicide may be used. Broadleaf weeds, sedges, and undesirable grasses shall be kept to a minimum. **Ninety-five percent (95%) weed-free turf shall be expected.**

Sidewalks must be kept free of weeds in the cracks and edges throughout the area. Spray with a non-selective weed killer without a spray tracker dye as needed. The weed pressure will dictate the frequency the sidewalks will need to be sprayed to maintain the cracks weed-free. Caution shall be taken when spraying weeds or grass runners on the homeowners' side of the sidewalk.

FERTILIZATION - TURF

A soil fertility and pH test shall be performed by the Contractor twice a year from several representative areas in the turf and landscape beds at all locations to help in determining the analysis of the product to use in the fertilizer application programs. Copies of these test results must be provided to the owner, with tested locations each time they are performed. **Areas treated shall have signs posted on all areas treated with chemicals to alert residents, especially those with children and pets.**

ST. AUGUSTINE & ZOYSIA

There should be a minimum of four (4) applications of a complete, acid-forming turf fertilizer applied to Zoysia and St. Augustine turf per year.

February (After February 15): (Zoysia and St. Augustine) A standard non-burning complete turf fertilizer containing a minimum of 30% to 40% of the Nitrogen in a controlled release form such as sulfur coated or polymer coated sulfur coated urea. There should be a minimum of 4% Iron, 6% sulfur, and 2% each of Magnesium and Manganese. A lesser amount of Iron will be acceptable if it is in a chelated form. The fertilizer shall be applied at 1 pound of actual Nitrogen per 1000 Square feet of turf.

May: (Zoysia and St. Augustine) Analysis should be determined by soil test results and recommendations.

August: (Zoysia and St. Augustine) Analysis should be determined by soil test results and recommendations.

October: (St. Augustine) Analysis should be determined by soil test results and recommendations.

November: (Zoysia) Analysis should be determined by soil test results and recommendations.

If these recommendations fail to keep the turf a consistent acceptable green color, a soil test should be performed, and the fertilizer blend adjusted accordingly. If the fertilizer does not keep the turf an acceptable green color between applications during the growing season, it may be necessary to provide an extra application of Nitrogen and/or Iron to provide suitable color and may be requested by the CROA representative. This will not be considered an extra to the contract.

All turf fertilizers should be watered in immediately after application whenever possible to prevent Nitrogen loss due to volatilization. Sweep or blow off walks and painted surfaces immediately after application to avoid discoloration. The contractor will also be responsible for sweeping or blowing fertilizer off all walkways, parking lots, roadways, and any affected paved area. Special attention should be taken to ensure that fertilizer does not enter any stormwater retention or drainage feature.

BAHIA TURF

There should be two applications of complete commercial turf fertilizer to Bahia grass areas per year.

March: A standard, non-burning complete turf fertilizer such as 16-0-8 or similar should be applied at one (1) pound of actual Nitrogen per 1000 square feet. (6.25 pounds of product)

September: 9-2-24 with 6% iron, 8 to 10% Sulfur, and 2% each of Magnesium and Manganese at one (1) pound of actual Potassium per 1000 square feet. (4.2 pounds of product) This will help with winter cold tolerance.

If yellowing occurs in between fertilizer applications, a liquid application of 12-0-0 with iron at the label rate, or another chelated iron source should correct the problem.

All chemical applications shall be performed by trained, licensed operators in accordance with applicable local, state, and federal regulations, safety standards, and the manufacturer's instructions.

All fertilizer shall be thoroughly watered in after application.

BERMUDA TURF "HIGH" DEMAND MAINTENANCE SCHEDULE

Month	Description/Product	Rate/Acre
1	15-0-15 Fertilizer 50% slow-release N with Minors	300lbs/Acre full coverage
2	15-0-15 Fertilizer 50% slow-release N with Minors	300 lbs./Acre full coverage
2	0-0-50 Potassium Sulfate	150Lbs/ Acre
2	Pre-Emergent	Per label rate full coverage
3	15-0-15 Fertilizer 50% slow-release N with Minors	300 lbs./Acre full coverage
3	Round-up clay areas and fence lines	
3	Weed control post-emergent	Per label rate full coverage
4	15-0-15 Fertilizer 50% slow-release N with Minors	300 lbs./Acre full coverage
4	Round-up clay areas and fence lines	2% Solution
4	Deep Tine Aerify	
4	Mole cricket control/Fire ants (Top Choice)	87 lbs./Acre full coverage
4	Verti-cut	3/4" deep with 2" spacing
4	Chelated Iron 12-0-0	
5	15-0-15 Fertilizer 50% slow-release N with Minors	300 lbs./Acre full coverage
5	Round-up clay areas and fence lines	2% Solution
Month	**Description/Product**	**Rate/Acre**
6	0-0-50 Potassium Sulfate	150lbs/Acre
6	15-0-15 Fertilizer 50% slow-release N with Minors	300 lbs./Acre full coverage
6	Aerate ¾" coring tines 3"-4" deep	
6	Weed control post-emergent	Per label rate full coverage
6	Round-up clay areas and fence lines	2% Solution
6	Heritage Application	Per label rate full coverage
7	15-0-15 Fertilizer 50% slow-release N with Minors	300lbs/Acre full coverage
7	Round-up clay areas and fence lines	2% Solution
8	15-0-15 Fertilizer 50% slow-release N with Minors	300 lbs./Acre full coverage
8	Round-up clay areas and fence lines	
8	Pre-M	Per label rate full coverage
8	Mole cricket control/Fire ants (Top Choice)	87 lbs./Acre full coverage
9	15-0-15 Fertilizer 50% slow-release N with Minors	300 lbs./Acre full coverage
9	0-0-50 Potassium Sulfate	150Lbs/ Acre
9	Round-up clay areas and fence lines	2% Solution
9	Aerate ¾" coring tines 3"-4" deep	
9	Weed control post-emergent	Per label rate full coverage
10	15-0-15 Fertilizer 50% slow-release N with Minors	300 lbs./Acre full coverage
10	Round-up clay areas and fence lines	2% Solution
11	15-0-15 Fertilizer 50% slow-release N with Minors	300 lbs./Acre full coverage
12	15-0-15 Fertilizer 50% slow-release N with Minors	300 lbs./Acre full coverage
12	Round-up clay areas and fence lines	2% Solution
12	Deep Tine Aerify	

GROUND COVER AND SHRUB MAINTENANCE

SHRUBS

(Indian Hawthorn, Holly, Viburnum, Boxwood, and similar woody ornamentals)
These shrubs shall be pruned only as necessary to maintain their natural habit and growth at specified heights, to remove excessive growth, and to maintain a natural, informal appearance. Individual plants shall be allowed to grow together into one mass, never shaped as individual plants.

As the shrubs mature, individual plants should not be apparent; plants shall be allowed to grow together in a "soft", informal, and un-sheared mass.

At no time shall any shrubs be allowed to impede safe visibility for pedestrians and vehicles.

Maintain most shrubs in pedestrian and parking areas for safety and visibility, usually about 30" +/-, but always as dictated by the circumstances in any specific location. Where larger shrubs are used for screening of specific features, their ultimate heights shall be dictated by the purpose for which they have been used in the plan, and they shall be allowed to reach the effective height and density necessary to serve that purpose. In no instance, however, shall any shrub be allowed to obstruct visibility for traffic and pedestrian safety. Use hand clippers to remove odd, long, or undesirable branches, keeping the shape natural and uniform. Do not prune masses into geometric forms by hand shearing.

Where plants are adjacent to curbs, or where shrub edges are visible, prune exposed edge of mass back in a natural, informal shape; do not shear vertically.

In a massed planting, exceptionally long branches shall be cut back well inside the mass. Selective pruning and thinning of old wood rather than overall shortening shall be done to keep the mass vigorous and healthy. Shearing shall be minimized to avoid stunted tip growth, excessive density, and unnatural outline.

HERBACEOUS "GRASSY" SPECIES

(Society Garlic, Lily-of-the-Nile, Liriope, and similar species)
These groundcovers shall be allowed to grow to their natural height and width; pruning is not necessary. Cultivate to achieve dense mass; maintain separation between ground cover and adjacent plant materials.

Spent flower heads shall be removed regularly, as required for the best appearance.

If more than 50% of a plant is frost-damaged, cut back to remove all dead or damaged foliage after the last frost.

WOODY GROUNDCOVERS

(Parson's Juniper, Blue Pacific Juniper, Lantana, and similar species)
These groundcovers shall be allowed to grow together to form full, natural, informal masses, maintaining separation between adjacent plant materials.

Prune to maintain height at 18" to 24" or as otherwise appropriate for the species, and to prevent masses from overgrowing curbs, sidewalks, and bed edges. Do not allow masses to become overgrown, requiring extensive pruning.

Depending on the degree of possible cold damage, cut back as required after the last frost to achieve intended growth. Do not prune masses into geometric forms by hand shearing.

Where plants are adjacent to curbs, sidewalks, and bed edges, prune the edge of the mass back in a natural, informal shape; do not shear vertically.

GROUNDCOVERS

(Dwarf Confederate Jasmine, English Ivy, and similar species)
Cultivate vining groundcovers to achieve dense, entwined masses; maintain separation between groundcover and adjacent plant materials, by edging and/or pruning.

Some species, such as Dwarf Confederate Jasmine, once grown to full and dense coverage (which may take 2 or 3 years for some species), may be trimmed at a height of 6" periodically to maintain a dense and consistent level of coverage.

Do not shear masses vertically adjacent to curbs, bed edges, drainage structures, valve boxes, meter boxes, and other such interfaces. The prune exposed the edge of the mass back at a maximum 45-degree angle from horizontal, in a natural, informal shape.

ACCENT PLANTS

(African Iris, and similar species used as accents)
Accent plants should only be trimmed as necessary to remove excessive growth, and shoots while maintaining a natural, informal appearance. As the plant matures, the plants shall be maintained at the intended height of the accent feature, and not allowed to become overgrown or invasive.

Use hand clippers to remove odd, long, or undesirable shoots, and to remove outer pups or shoots from overgrown clumps, keeping the shape natural, loose, and uniform. Do not share.

Accent plants that are damaged by the frost shall have all the damaged foliage removed and, in such cases, the damage affects the entire plant, it shall be cut back to the ground after the last frost.

ORNAMENTAL GRASSES

(Cordgrass, Muhly Grass, Fountain Grass, and similar species)
Ornamental grasses shall be maintained at their natural height and width.

To achieve the best form and appearance, loose, brown, and dead foliage shall be removed in the months of February through March before new spring growth. Severe pruning to the ground is not an acceptable practice and as a result, will require replacement at the Contractor's expense upon discovery.

PRUNING OF GROUND COVER AND SHRUBS

Plant materials and tree limbs must be kept trimmed away from multi-modal transportation paths and sidewalks and at no time should be allowed to encroach on these areas.

Special attention to areas around landscape lighting fixtures shall be given not only to promote lighting effect but to the project of fixtures themselves from damage.

DISEASE AND PEST CONTROL

All plant material shall be reasonably free of pest infestations, fungus, and disease. Regular inspections during normal maintenance operations shall be undertaken by qualified individuals to identify and respond to such conditions. When five (5%) of any individual plant material shows signs of disease, curative action must be taken.

Proper fertilization, proper watering, and proper drainage shall be practiced promoting plant vigor and resistance to pests and disease.

Chemical application shall be used as appropriate to prevent damage, promote healthy and continued growth, and treat and cure identified problems. All use of chemicals shall comply with all applicable regulatory and safety standards and shall be applied by appropriately trained and licensed pest control specialists.

Non-targeted plant material damaged because of improper chemical applications must be replaced upon discovery at the contractor's expense.

WEED CONTROL

Landscape beds are to be kept free "WEED FREE" at all times during the term of this contract. The use of pre-emergent and selective herbicides is required for all Ground Cover Annual Flower beds. The use of pre-emergent and selective herbicides is not required but encouraged. Hand weeding shall be done as necessary. Non-selective herbicides

Apply pre-emergent and post-emergent weed control to all ground cover and shrub beds at the maximum allowable rate per the manufacturer's label. The contractor may apply pre-emergent herbicide at more frequent intervals to manage weed populations at an acceptable level at no additional cost to the CROA.

Application of herbicides shall be done on a curative "as needed" basis. A pre-emerging herbicide may be used. Broadleaf weeds, sedges, and undesirable grasses shall be kept to a minimum.

Areas treated shall have signs posted on all areas treated with chemicals to alert residents, especially those with children and pets.

FERTILIZATION OF GROUNDCOVER AND SHRUBS

Shrubs and groundcovers shall be fertilized four (4) times per year with a complete commercial fertilizer such as 8-2-12, 12-2-14, or 13-3-13 containing a minimum of 25% slow-release Nitrogen, 6% Sulfur, 2% of both Magnesium and Manganese and 3% Iron. This shall be applied in March, May, July, and October at ½ cup per small shrub, 1 cup per large shrub, or 15 to 30 pounds per 1000 square feet of plant bed, depending on the spacing, type of plants, and product used. Fertilizer shall be broadcast evenly over the entire root zone, and care shall be taken to avoid accumulation of fertilizer granules on leaves, crowns, etc.

The fertilizers should be watered in immediately after application whenever possible to prevent Nitrogen loss due to volatilization. Sweep or blow off walls and paint surfaces immediately after application to avoid discoloration. Special attention should be taken to prevent any fertilizer from being blown, swept, or otherwise ending up in any parking lot or roadway storm drain. Any fertilizer that ends up upon any non-target area or hard surface shall be removed and applied to a target area.

TREE MAINTENANCE

CRAPE MYRTLES

Crape Myrtles shall be maintained with an open, natural crown. The natural branching structure shall be maintained with light pruning only to promote healthy, natural development of form, size, and width.

As trees mature, a clear trunk height of 8.5' minimum shall be maintained.

Canopies shall in no case be allowed to deter safety and visibility in traffic situations.

Light pruning should be performed to remove seed pods as they form to promote re-flowering. The contractor should remove most remaining seed pods in Fall/Winter, where overall height allows this to be done safely. **All Crape Myrtles must be pruned no later than the end of March.** No branches larger than 1/2" in diameter, or more than 24" of the current year's growth shall be removed.

Topping, heading cuts, or trimming back to knobs is not permitted. Proper reduction cuts may be made in some instances with the approval of the landscape manager.

PALMS

Palms shall be pruned once the fronds have dropped to an 8:00 to 4:00 angle. The Contractor shall remove the fronds to a maximum 10:00 to 2:00 angle and all seed and emerging seed pods will be removed. Pruning of palms shall occur a minimum of (3) times per year between the months of March through October.

All Phoenix species will be pruned to a maximum 9:00 to 3:00 angle.

Within all swimming pool areas, palm fronds over the pool deck must be maintained at a height of 10'. Damage or dead palm fronds, seed heads, flower and fruit clusters must be removed upon discovery to reduce the risk of injury to the public and for the overall appearance of the pool facility.

LIGUSTRUM TREES

Ligustrum Trees shall be maintained to have full natural heads, trimming the long runners, but keeping a loose rather than a sheared form.

The tree should be limbed up proportionally with the size of the tree and to allow visibility, where required for safety.

NELLIE STEVENS HOLLY AND RELATED SPECIES

These trees shall be maintained to have thick and dense foliage. They should only be pruned to promote health, and natural development form.

The lower limbs and foliage should never be removed. These trees are intended to obtain their natural shape with the foliage filling the ground.

LIVE OAK AND RELATED SPECIES

Live Oaks and related species are to be maintained to have thick dense foliage. They should only be pruned to promote healthy and natural development form. Pruning shall be kept at a minimum.

As trees mature, only remove necessary lower branches to maintain the natural normal form of the tree, and to allow for necessary maintenance.

As a rule, the tree shall have 2/3 canopy and 1/3 clear trunk.

All limbs that are pruned back to the main trunk or central leader shall be cut at the collar, but not damaging the collar.

MAGNOLIAS

Magnolias shall be maintained to have thick and dense foliage. They should only be pruned to promote health and natural form.

The lower limbs and foliage should never be removed. These trees are intended to obtain their natural shape with the foliage filling the ground.

Pruning shall not be done routinely, but mainly to remove diseased, damaged, or dead wood. To encourage full and dense foliage, prune lightly in the fall or early spring (before the spring flush), by removing 6" to 10" of foliage in appropriate areas and trimming leggy branches, to promote natural shape and form. The central leader shall not be removed.

ALL TREE SPECIES

Pruning shall not be done routinely, but mainly to remove diseased, damaged, or dead wood, or to provide visibility. The contractor shall be responsible for pruning up to the first fifteen (15) feet of trees as needed to maintain a natural and healthy appearance.

All broken limbs or debris resulting from winds, storms, or other causes shall be removed promptly, or immediately if impeding safety.

Pruning cuts shall be clean and smooth with no rough or torn bark or wood remaining.

Maintenance and removal of stakes, guys, tree bracing materials, etc. for trees, palms, and large shrubs is considered routine maintenance. The gridling of trees due to lack of maintenance is not acceptable and will require replacement at the contractor's expense upon discovery.

DISEASE AND PEST CONTROL

All plant material shall be reasonably free of pest infestations, fungus, and disease. Regular inspections during normal maintenance operations shall be undertaken by qualified individuals to identify and respond to such conditions. When five (5%) of any type of plant material shows signs of disease, curative action shall be taken.

Proper fertilization, proper watering, and proper drainage shall be practiced to promote plant vigor and resistance

to pests and diseases.

Chemical application shall be used as appropriate to prevent damage, promote healthy and continued growth, and treat and cure identified problems. All use of chemicals shall comply with all applicable regulatory and safety standards and shall be applied by appropriately trained and licensed pest control specialists. Areas treated shall have signs posted on all areas treated with chemicals to alert residents, especially those with children and pets.

FERTILIZATION OF TREES

Proper fertilization for the varied trees shall be performed three (3) times per year with a complete commercial fertilizer such as 8-2-12, 12-2-14, or 13-3-13 containing a minimum of 25% slow-release Nitrogen, 6% Sulfur, 2% of both Magnesium and Manganese and 3% Iron. The fertilizer shall be broadcast evenly over the entire root zone out to the drip line. Applications shall be at the labeled rate on the bag and applied in March, June, and September.

Palms shall be fertilized three (3) to four (4) times per year with a fertilizer with an analysis of 8-2-12 plus 4% Magnesium (Mg) and 2% Manganese (Mn) and 0.10% to 0.15% Iron (Fe), Zinc (Zn), Boron (B), and Copper (Cu). One hundred percent (100%) of the Nitrogen (N), Potassium (K), and Magnesium (Mg) should be in the controlled release form, while all the micronutrients except Iron (Fe) should be in Sulfate form. Two percent (2%) Iron (Fe) from Iron Sulfate can be substituted for 0.15% Iron (Fe) from chelated forms. (EDTA, DTPA, etc.). This product is to be applied at the rate of 1.5 pounds per 100 square feet of palm canopy or bed area, or 15 pounds per 1000 square feet.

ANNUAL FLOWER MAINTENANCE AND REPLACEMENT FLOWER

BED MAINTENANCE

Annual flower beds shall be maintained in a fashion to allow for a full, colorful appearance always throughout the year. Beds shall be kept free of spent flowers, weeds, and debris.

Shrubs and turf surrounding annual beds must be trimmed to keep them from encroaching on the annual flowers and reducing the bed size. The original size of the beds and the annual flower count as described must remain the same.

Additional soil, soil amendments such as composted manure, organic peat, or a similar mix shall be incorporated and tilled in as part of the annual bed preparation as needed to maintain a rich growing environment for healthy growth and a pleasing appearance.

FERTILIZATION

A standard balanced slow-release fertilizer such as Osmocote, Nutricote, Sierra, or similar shall be incorporated into the bed as a soil amendment before planting each rotation of annuals, perennials, or a mixture of both.

Supplemental fertilization of a complete liquid fertilizer such as 20-20-20 or 10-60-10 at the labeled rate shall be applied to all color beds at least monthly to promote vigorous growth, flowering, and color.

SEASONAL REPLACEMENT

A minimum of four (4) complete changeouts per year in beds that are labeled as annuals on the site plan and unit pricing form or as otherwise designated by the CROA Representative. The annuals shall be four (4) inches or four

and a half (4 ½) inch container size and installed at a maximum of 10" on center.

Specific colors and varieties for each annual rotation must be approved by the CROA Representative before installation. Annual flowers must be in bloom upon installation.

WEED CONTROL

Beds are to be kept free of weeds, landscape debris, and trash. Hand weeding shall be done as necessary.

Application of herbicides shall be done on a curative "as needed" basis. A pre-emerging herbicide may be used. Broadleaf weeds, sedges, and undesirable grasses shall be kept to a minimum.

DISEASE AND PEST CONTROL

All plant material shall be reasonably free of pest infestations, fungus, and disease. Regular inspections during normal maintenance operations shall be undertaken by qualified individuals to identify and respond to such conditions. When five (5%) of any type of plant material shows signs of disease, curative action shall be taken.

Proper fertilization, proper watering, and proper drainage shall be practiced promoting plant vigor and resistance to pests and disease.

Chemical application shall be used as appropriate to prevent damage, promote healthy and continued growth, and treat and cure identified problems.

PESTICIDE USE SPECIFICATIONS

GENERAL

The contractor shall have extensive knowledge and experience developing and implementing Integrated Pest Management Programs (IPM) and shall develop, implement, and adjust an IPM program for all sites included in this contract.

All pesticide applications are to be made by or under the supervision of a person or persons with appropriate valid licenses, permits, or certificates issued under all applicable Federal, State, or local laws or regulations. Said person or company is to be currently registered to conduct a pest control business in the State of Florida and the County of Osceola.

Pesticide applications are to be made in strict compliance with the product label directions, restrictions, and precautions as well as with any other requirements deemed necessary by any county, state, or federal regulatory agency.

Within thirty days of the award of the contract, and/or before the actual start of work, the Contractor shall supply to the CROA Representative a list of all chemicals proposed to be used in the fulfillment of said contract. No "generic" chemicals shall be allowed for substitution purposes unless approved by the CROA Representative.

The most current specimen labels and Safety Data Sheets for all listed chemicals shall be supplied at this time and Copies of both the P.C.A. recommendations and applicable Pest Control Advisor and Qualified Applicator

Licenses or Qualified Applicator Certificates shall be submitted. All above-mentioned items shall be resubmitted in January of each year the Contract is in effect.

CROA shall be notified in writing of any changes or deviations from the above list. Application of deviated materials shall not be made before approval by the CROA Representative.

A five-working day notice in writing shall be given to CROA before any pesticide application. Notice shall include the name of the chemical, area to be treated, rate of chemical, method of application, date and time of day application is to be performed. CROA must give written consent before application of any Category I, or restricted use, pesticide. **Areas treated shall have signs posted on all areas treated with chemicals to alert residents, especially those with children and pets.**

REFUSE CONTROL

Areas within the project limits shall be kept free of litter and refuse (trash, cans, paper, bottles, cigarette butts, etc., and accumulations of leaves, dirt, and branches) always. Policing and litter pickup should occur as often as necessary to ensure a clean, litter-free appearance. **Emptying doggie pots and trash cans in assigned parks are the responsibility of the landscaping company daily Monday- Friday.**

REPLACEMENT OF PLANTS TO MAINTAIN DESIGN INTENT

No changes or additions of plant materials and no changes or additions to the design or layout of the landscaping shall be made without review and approval of CROA.

Any tree, palm, shrub, or groundcover plantings that die, or which are damaged or decline to the extent of affecting the overall appearance of the project, shall be replaced promptly with the same species in a size that reasonably matches the plant it is replacing, to preserve the design intent and appearance of the landscaping. **It is the responsibility of the landscaping company to send estimates along with pictures of plants needing to be replaced immediately.**

Any tree or plant that is abusively pruned in noncompliance with these specifications shall be replaced by the same species in a size that reasonably matches the plant it's replacing.

The Contractor shall be responsible for the full cost of such replacements where required due to incorrect maintenance (abusive pruning, fertilizer burn, etc.) or inadequate maintenance (disease, pests, fungus, irrigation negligence, etc.). The owner shall be responsible for the full cost of such replacements only due to damaging acts by others, acts of God, and/or other circumstances not attributable to actions or inactions of the Contractor.

If the plan included annuals or perennials, replacements shall be made on a seasonal basis, or whenever required, to maintain an acceptable year-round effect. Conversion of bedding plant areas to other landscape plants shall be subject to review and approval by CROA.

PLANT GUARANTEE AND/OR REPLACEMENT POLICY

Existing plants shall be replaced by the Contractor if they die due to the Contractor's negligence. All replacement plants shall be inspected and approved by CROA before installation. All landscape improvements or repairs shall conform to the Celebration Residential Owners Association, Inc. Landscape Specifications and Details.

The Contractor must assume the maintenance responsibility and warrant future landscape improvements, new.

Damage to irrigation systems caused by the Contractor shall be the responsibility of the Contractor to repair within 48 hours of occurrence, self-discovery, or notification by CROA. All replacement parts and materials are to be the same type and model as the original installation unless a substitute is approved by a CROA representative. Failure to do so shall result in a reduction in monthly payments. In addition, a performance deficiency notice shall be issued to the Contractor.

IRRIGATION SCHEDULING AND WATER MANAGEMENT

The contractor shall be responsible for the programming of irrigation controllers that are part of the Rain Bird centralized systems. The Contractor shall be responsible for programming all standalone irrigation controllers.

For changes to irrigation schedules controlled by the Central Irrigation Computers (Maxicom), the Contractor shall submit proposed irrigation schedules or a request to change a schedule to the CROA Representative and the Celebration Community Development District Representative, two (2) days in advance of the needed change. The CROA Representative, using the information provided by the Contractor, shall ensure the schedules are updated by the CCDD by the date requested.

The Contractor shall perform inspections and repairs of all irrigation systems within contracted sites on the following schedule:

Parks, Facilities

- One (1) time per month October - February & two (2) times per month March - September.

Sports Fields

- Two (2) times per month October - February & four (4) times per month March – September.

All inspections shall be included in the calendar work schedule submitted monthly.

The Contractor shall be responsible for programming each non-centralized irrigation controller to run only on assigned watering days as required by the Enterprise Community Development District (ECDD). Failure to do so shall result in a penalty of $100 per occurrence per irrigation controller for those observed to not be programmed as required.

CROA shall have a final determination as to the appropriate programming of the Maxicom Irrigation Controllers. Upon discovery, the Contractor shall immediately report any irrigation system malfunctions, vandalism, or damage to the CROA representative. The Contractor shall be responsible for necessary repairs to irrigation controllers. The CROA Representative shall inspect and confirm any proposed repairs to irrigation controllers before commencement.

The Contractor shall furnish CROA with estimates and approval of repairs over $100.00 per park and an associated inspection report, with location, pricing, and quantities listed, for all irrigation system repairs. Invoice and inspection reports must indicate the exact location of the repairs, the controller, and the valve number to be considered for payment.

IRRIGATION SPECIAL PROVISIONS - WATER MANAGEMENT

The Contractor shall manage irrigation water applied to CROA landscape maintenance areas included in this contract at a rate and quantity that closely matches the actual demands of plant material with little or no runoff. All turf areas shall be irrigated only as required to maintain acceptable growth and appearance without excess usage.

All components of the irrigation system shall be maintained in proper working order, as per manufacturer specifications and this specification. Contractors shall inspect irrigation systems regularly, at a minimum, per the requirements above. In addition, observations shall be made during regular maintenance activities for any apparent concerns, such as broken and/or malfunctioning heads, and shall report observations and areas that need repair to the CROA Representative. All system problems observed shall be repaired immediately upon discovery or within 48 hours if immediate repairs are not practical.

More detailed inspections of system equipment and performance shall be conducted per specifications throughout the year with a site inspection report per zone provided to the CROA Representative every week.

This shall comprise all irrigation components that include but are not limited to backflow prevention devices, main pressure lines, lateral lines, master valves, flow meter valves, sprinkler heads, pressure regulators, controllers, valves, wiring, and rain gauges if installed. The contractor's responsibility for main lines shall consist of continual monitoring and any necessary repairs.

IRRIGATION/OPERATION AND MAINTENANCE

The contractor shall keep all controllers in continuous working order. The contractor shall repair and clean the irrigation controllers as needed to ensure good working performance. The contractor shall keep all controller enclosures in good working order. This includes cleaning door panels, vacuuming interiors, pest prevention-eradication, lubrication of hinges, locks, etc. The contractor is responsible for always securing the controller cabinet door.

The contractor shall adjust all aspects of the irrigation systems to:

- Provide optimum coverage of all landscaped areas.
- Prevent or minimize runoff and/or erosion.
- Prevent or minimize water on roadways, and facilities (tennis, basketball, and handball courts, walkways, trails, fences, private property, or other non-landscaped surfaces).
- Match precipitation rates of all nozzles/heads.
- Prevent, eliminate, and/or limit hazardous conditions.
- Prevent "flood irrigation"; over-irrigating one area to account for coverage deficiency in another area.

All system malfunctions, damage, and obstructions shall be recorded, and timely corrective action taken in addition to specified routine irrigation system testing, all irrigation systems shall be tested and inspected as necessary when damage is suspected, observed, or reported; daily, if needed.

The contractor shall correct deficient irrigation systems and equipment as necessary following notification from the CROA Representative.

The contractor shall notify the CROA Representative immediately any time an irrigation system is shut down for any reason.

installation and refurbishment of existing landscape as specified within this scope.

The Contractor and the CROA Representative will inspect said landscape before final acceptance by CROA.

The contractor shall submit an inspection report to the CROA Representative within 3 days following the inspection which must list all concerns and recommendations to correct. If the said inspection report is not submitted as required, the Contractor must accept and assume the plant replacement warranty for the remainder of the contract term without consideration of compensation.

Any issues discovered during the inspection process will be corrected based on plant health.

MULCHING/ PINESTRAW

All plant beds and tree rings shall be always maintained with an adequate and neat layer of Cocoa Brown Hardwood Mulch or Pine straw and shall not exceed 3" in depth. Mulching shall occur once per year before November 30th each year.

The contractor will replenish mulch/pine straw where disturbed due to mowing operations such as the edge of landscape beds and tree rings. This shall have been performed at no additional cost to CROA.

Care should be taken during mulching/Pine Straw application to not cover landscape lighting, valves, junction boxes, or other structures and components.

Care shall be taken to avoid piling mulch/ Pine Straw around the plant crowns or trunks.

IRRIGATION SYSTEMS

The Irrigation Contractor / Technician(s) shall be Rain Bird Maxicom Certified and must submit proof of a minimum of 3 years experience with Irrigation installation and maintenance including ESP-LXD Series Two- Wire Decoder Controllers, flow meter, rain gauge, soil moisture sensors, and a good understanding of Evapotranspiration and the ability to utilize such knowledge for the benefit of a healthy landscape.

Irrigation systems and components shall be monitored to ensure that proper coverage is always achieved. Contractors shall provide one dedicated and certified Irrigation Technician for every 300 zones.

IRRIGATION REPAIRS

The Contractor shall be responsible for the repair of all site irrigation beginning with the customer service valve; downstream from the water meter, all pressure main lines, or any equipment in line (flow meters, master valves, etc.), through lateral lines and sprinkler heads; including all irrigation controllers, rain gauges, control, and communication wiring. The contractor shall notify the CROA Representative of any mainline failure within two (2) hours of occurrence. **The CROA Representative shall approve all repairs in advance.** The Contractor shall notify the CROA Representative once repairs are completed and before filling in any repairs to allow for inspection. Once inspected, the CROA Representative will notify the Contractor to backfill the repair. If the open repair presents a hazard to the public the repair shall be backfilled as authorized by the CROA Representative. Photographs of the repairs shall be submitted.

The Contractor shall have full responsibility to ensure watering requirements are met within each CROA site. The contractor's forces shall be capable of performing repairs, installations, and modifications of existing irrigation systems to adequately irrigate all landscaped areas.

The Contractor must ensure that sprinkler heads are in good operational order, filters are cleaned regularly, and nozzles are replaced when worn or inadequate coverage occurs. Any minor changes such as riser extensions (vertically or horizontally), sprinkler head exchanges, and nozzle and filter replacements shall be considered as included in the contract price and no additional compensation shall be allowed.

All electrically operated valves shall close completely after the station-watering program. As needed, valves shall be cleaned, repaired, and/or replaced promptly to restore proper operation. As part of the base bid, valve boxes shall be kept clean of sand, debris, and silt to a depth of 2" below the bottom of the valve.

MATERIALS

All replacement materials shall be original types and model materials unless a substitute is approved by the CROA Representative. The contractor shall maintain an adequate inventory of medium to high-usage stock items for the repair of the irrigation systems. The contractor shall implement repairs under all warranties.

The cost of materials invoiced to CROA, if not listed on the unit price sheet, shall be the Contractor's actual cost plus a maximum 15% markup. Labor shall be considered as included in the contract price and no additional compensation shall be allowed. All parts and material invoices must include a copy of the irrigation inspection report specific to each project category location.

DISASTER / EMERGENCY PLAN

When a Hurricane Warning has been issued for the Central Florida area, the Contractor must turn off all irrigation systems immediately as directed by the CROA Representative. This includes weekends and holidays. Once the Hurricane threat has passed, the Contractor shall ensure all irrigation systems are fully operational within 48 hours as directed by the CROA Representative.

In the event of a declared emergency or disaster, the Contractor shall provide debris removal services. Before mobilization for debris removal activities, the Contractor shall provide CROA, in writing, hourly rates for personnel and equipment. Unreasonable rates will be rejected. All overhead costs are included in the hourly rates.

Hourly rates for equipment apply only when equipment is operating and include all associated costs such as operator, fuel, maintenance, and repair.

Personnel and equipment hourly rates include only those hours that the Contractor's personnel are performing the debris removal activities. Stand-by time is not an eligible expense.

Disaster Recovery Assistance Services shall not exceed seventy (70) hours for each declared emergency/disaster without an estimate provided to the CROA representative and approved in writing by CROA.

The contractor shall maintain and supply CROA with all the necessary and adequate documentation on all emergency/disaster-related services to support reimbursement by other local, state, or federal agencies.

CROA reserves the right to immediately terminate all Disaster Recovery Assistance activities under this Agreement

for any reason. CROA will not be held responsible for any loss incurred by the Contractor because CROA elected to terminate these activities under this paragraph.

FORECLOSURE MOWING

The contractor will be required to perform landscape maintenance services for foreclosed properties on an as-needed basis. This will be paid at the Hourly Rate as specified on the bid sheet. The CROA Representative will contact the Contractor with specific addresses. The Contractor will have five (5) business days after notification to complete the work. The grass is to be brought to the height of one-half (1/2) of the existing height not to exceed eight inches (8"). For example: if the grass is eight inches (8") high at the time of notification, the grass shall be cut to four inches (4").

Landscape maintenance service shall include mowing, string trimming, blowing of debris and raking as necessary, and maintaining irrigation.

UNIT PRICE MUST INCLUDE INSTALLATION/LABOR

DESCRIPTION	UNIT PRICE
RAIN BIRD PESB - PRS - D SERIES	
Rain Bird PRS Dial pressure module	
Rain Bird 1" Valve	
Rain Bird 1 1/2" Valve	
Rain Bird 2" Valve	
Electric, brass 300-BPES - 3"	
Diaphragm Assembly PGA 100	
Diaphragm Assembly PGA 150	
Diaphragm Assembly PGA 200	
Diaphragm Assembly BPES 300	
Electric Solenoid 24 VAC PGA	
Electric Solenoid 24 VAC 300 BPES	
RAIN BIRD 1800 PRS SERIES - with NOZZLES	
1806 PRS 6" pop-up	
1806 SAM PRS 6" pop-up	
1812 PRS 12" Pop-up body	
1812 SAM PRS 12" pop-up	
RAIN BIRD 5000 SERIES ROTOR - with NOZZLES	
6"	
RAIN BIRD CONTROLLER	

4-Zone Clock	
6-Zone Clock	
TURF MAINTENANCE (per Acre)	
Bermuda	
St. Augustine	
Zoysia	
Bahia	
SOD (Strip Existing & Install per Sq.') – Minimum 500 Sq.'	
St. Augustine	
Bermuda (Celebration)	
DESCRIPTION	**UNIT PRICE**
Zoysia (Empire)	
Bahia	
SHRUBS (Installed)	
1 Gallon	
3 Gallon	
7 Gallon	
Mulch (Installed per Yard)	
Brown Cocoa Hardwood Mulch	
Pine Straw (per Bale)	

REFERENCE EXHIBITS FOR ADDITIONAL SITE-SPECIFIC DETAILS

END OF SCOPE

4/3/2024

Celebration Residential Owners Association, Inc. (CROA)

Pricing Worksheet "Exhibit B"

UNIT PRICE MUST INCLUDE INSTALLATION/LABOR

DESCRIPTION	UNIT PRICE
RAIN BIRD PESB - PRS - D SERIES	
Rain Bird PRS Dial pressure module	$145
Rain Bird 1" Valve	$200
Rain Bird 1 1/2" Valve	$230
Rain Bird 2" Valve	$252
Electric, brass 300-BPES - 3"	$560
Diaphragm Assembly PGA 100	$125
Diaphragm Assembly PGA 150	$150
Diaphragm Assembly PGA 200	$210
Diaphragm Assembly BPES 300	$328
Electric Solenoid 24 VAC PGA	$35
Electric Solenoid 24 VAC 300 BPES	$35
RAIN BIRD 1800 PRS SERIES - with NOZZLES	
1806 PRS 6" pop-up	$15
1806 SAM PRS 6" pop-up	$18
1812 PRS 12" Pop-up body	$22
1812 SAM PRS 12" pop-up	$25
RAIN BIRD 5000 SERIES ROTOR - with NOZZLES	
6"	$32
RAIN BIRD CONTROLLER	
4-Zone Clock	$300
6-Zone Clock	$350
TURF MAINTENANCE (per Acre)	
Bermuda	$385
St. Augustine	$335
Zoysia	$335
Bahia	$335

	UNIT PRICE
Mowing of LOT D	$335
Additional Rolling of Turf	Per area
Red Ant Treatments	Per area
Sanitizing and Cleaning of Synthetic Turf	Per area
Service of infill of the rubber and/or cool play	Per area
SOD (Strip Existing & Install per Sq.') – Minimum 500 Sq.'	
St. Augustine	$1.35
Bermuda (Celebration)	$1.45
DESCRIPTION	**UNIT PRICE**
Zoysia (Empire)	$1.35
Bahia	$0.95
SHRUBS (Installed)	
1 Gallon	$9
3 Gallon	$22
7 Gallon	$45
Mulch (Installed per Yard)	
Brown Cocoa Hardwood Mulch	$65
Pine Straw (per Bale)	$10

Agreement No: XXXXXXXX
Project: **Service Area XXXXXX**
Scope of Services: Parks and
Service Areas Maintenance

Reviewed by:

SERVICES AGREEMENT

THIS AGREEMENT is made effective as of the ____ day of **January 1st, 2024,** by and between Celebration Residential Owner's Association, Inc. (herein referred to as the "Owner"), whose mailing address is 851 Celebration Avenue, Celebration, FL 34747, Attention: **President,** and **Vendor** (herein referred to as the "Contractor"), whose mailing address is **XXXXXXXXXXXX.**

WITNESSETH

WHEREAS Owner desires to employ the services of Contractor for an initial 42-month period with two optional 12-month extensions, with the initial 42-month period beginning **MAY 1, 2024,** and ending **December 31st, 2027,** to perform the hereinafter described Services, and Contractor desires to be so employed. Costs shall remain fixed and firm for the initial 42 months of the Agreement, after which they shall be adjusted according to Exhibit B, the Rate Schedule, if the Agreement is extended for 12-month increments by mutual agreement of the parties, or as otherwise modified as outlined in this Agreement.

NOW THEREFORE, in consideration of the premises and the mutual covenants and obligations contained in this Agreement, the parties agree as follows:

1. DEFINITIONS.

a. Agreement. The Agreement consists of this Services Agreement, the Scope of Services, the Rate Schedule, the form of Changed Service Authorization, the form of General Release, and all other documents enumerated on the List of Exhibits set forth below. The Agreement represents the entire and integrated Agreement between the parties hereto and supersedes all prior negotiations, representations, or agreements, either written or oral. The Agreement may be amended or modified only as set forth below in Article 6.

b. Services. The term "Services" as used in this Agreement shall be construed to include all Services outlined in Exhibit A, all obligations of Contractor under this Agreement, and where any Changed Service Authorizations have been issued under Article 6 of this Agreement, the changed Services set fo1ih therein.

2. SCOPE OF SERVICES.

a. A description of the nature, scope, and schedule of Services to be performed by Contractor under this Agreement by the following List of Exhibits:

i. Exhibit A, Scope of Services 29 Pages.

ii. Exhibit B, Rate Schedule, 3 pages.

iii. Exhibit C, Changed Service Authorization form, 1 page.

iv. Exhibit D, General Release form, 1 page.

3. BASIS FOR COMPENSATION AND PAYMENTS.

Fixed Fee & Reimbursable

4/3/2024

a. Provided that the Contractor shall strictly perform all of its obligations under the Agreement, and subject only to additions and deductions by Changed Service Authorization as outlined in Article 6, the Owner shall pay to Contractor for its Services as outlined in Article 2, a Fixed Fee in the amount of $ annually plus all Reimbursable Expenses as defined below.

b. The Contractor shall on the twenty-fifth (25th) day of each calendar month deliver to the Owner an Application for Payment in such form and with such detail as the Owner requires.

c. Based on the Contractor's Application for Payment, and the approval of the Application for Payment issued by the Owner, the Owner shall make equal monthly payments to the Contractor on account of the Fixed Fee. Such monthly payments shall be made on or before the fifteenth (15th) day of each calendar month or the twentieth (20th) day after receipt by the Owner of the Contractor's Application for Payment and of such documentation to verify the amount owed as the Owner may require, whichever is later; provided, however, that the Owner shall have no obligation to make payment as aforesaid if it has withheld approval of any Application for Payment.

d. Reimbursable Expenses shall include only the following actual and necessary costs and expenses reasonably and properly incurred by Contractor in connection with the Services rendered under this Agreement:

e. Contractor shall be compensated for any Services beyond those outlined in Article 2, in such an amount as the patties shall mutually agree in advance, such amount to be added to the Fixed Fee and invoiced and paid by the terms of Paragraphs b and c above; provided, however, that Contractor shall not be entitled to compensation for such Services unless Contractor has obtained the prior written authorization of Owner to perform the same by the provisions of A1ticle 6 of this Agreement.

f. The owner retains the right to reduce any portion of the Contractor's Scope of Services as outlined in Article 2, or any Changed Service Authorization, by the provisions of A1ticle 6 of this Agreement. In such event, the Owner shall be entitled to a proportionate reduction to the Fixed Fee.

g All invoices should reference the contract number and be returned to the following address:

CROA
P.O. Box 803555
Dallas TX, 75380.

4. REPRESENTATIONS, WARRANTIES, AND COVENANTS. The contractor hereby represents to the Owner that: (a) it has the experience and skill to perf01m the Services as outlined in this Agreement; (b) that it shall comply with all applicable federal, state, and local laws, rules, codes, and orders of any public, quasi-public or other government authority; (c) it is duly licensed to observe and perform the terms, covenants, conditions and other provisions on its part to be observed or performed under this Agreement; (d) it has by careful examination satisfied itself as to (i) the nature, location, and character of the general area in which the Services are to be performed including, without limitation, the surface conditions of the land and all structures and obstructions thereon, both natural and manmade, the surface water conditions of the general area and, to the extent pertinent, all other conditions; and (ii) all other matters or things which could in any manner affect the performance of the Services.

5. INSURANCE; INDEMNIFICATION.

a. Contractor shall, throughout the performance of its Services under this Agreement, maintain:

(i) Occurrence basis comprehensive general liability insurance (including broad form contractual coverage) and automobile liability insurance, with minimum limits of $1,000,000, respectively, combined single limit per occurrence, protecting it and the Owner from claims for bodily injury (including death) and property damage which may arise from or in connection with the performance of Contractor's Services under this Agreement or from or out of any act or omission of Contractor, its officers, directors, agents, and employees; and

(ii) Workers' compensation insurance as required by applicable law (or employer's liability insurance concerning any employee not covered by workers' compensation) with minimum limits of One Hundred Thousand Dollars ($100,000) per occurrence.

b. All such insurance required in Paragraph a. shall be in companies and on forms acceptable to the Owner and shall provide that the coverage thereunder may not be reduced or canceled unless thirty. (30) days prior written notice thereof is furnished to the Owner. Certificates of insurance (and copies of all policies, if required by the Owner) shall be furnished to the Owner. In the event of any cancellation or reduction of coverage, the Contractor shall obtain substitute coverage as required under this Agreement, without any lapse of coverage to the Owner whatsoever.

6. MODIFICATIONS, ADDITIONS, OR DELETIONS TO THE SERVICES.

a. A Changed Service Authorization shall be in writing by the Owner, in the form and manner attached to this Agreement as Exhibit C, which shall consist of additions, deletions, or other modifications to the Agreement.

b. The Owner may, from time to time, without affecting the validity of the Agreement, or any theme or condition thereof, issue Changed Service Authorization which may identify additional or revised Scope of Services, or other written instructions and orders, which shall be governed by the provisions of the Agreement. The Contractor shall comply with all such orders and instructions issued by the Owner. Upon receipt of any such Changed Service Authorization, the Contractor shall promptly proceed with the Changed Service Authorization, and the resultant decrease or increase in the amount to be paid the Contractor, if any, shall be governed by the provisions of Article 3 in this Agreement.

7. PROTECTION OF PERSONS AND PROPERTY.

a. The Contractor shall be responsible for initiating, maintaining, and supervising safety precautions and programs in connection with the Services, and shall provide all protection to prevent injury to all persons involved in any way in the Services and all other persons, including, without limitation, the employees, agents, guests, visitors, invitees, and licensees of the Owner who may visit or be affected thereby.

b. All Services, whether performed by the Contractor, its Subcontractors, or anyone directly or indirectly employed by any of them, and all applicable equipment, machinery, materials, tools, and like items used in the Services, shall be in compliance with, and conform to (a) all applicable laws, ordinances, rules, regulations and orders of any public, quasi-public or other governmental authority; and (b) all codes, rules, regulations and requirements of the Owner and its insurance carriers relating thereto. In the event of conflicting requirements, the more stringent shall govern.

c. The Contractor shall always keep the general area in which the Services are to be performed clean and free from accumulation of waste materials or rubbish (including, without limitation, hazardous waste), caused by the performance of the Services, and shall continuously throughout performance of the Services remove and dispose of all such materials. The Owner may require the Contractor to comply with such standards, means, and methods of cleanup, removal or disposal as the Owner may make known to the Contractor. In the event the Contractor fails to keep the general area in which the Services are to be performed clean and free from such waste or rubbish, or to comply with such standards, means, and methods, the Owner may take such action and offset.

any costs or expenses of whatever nature paid or incurred by the Owner in undel laking such action against any sums then or thereafter due to the Contractor.

8. BOOKS AND RECORDS. The contractor shall maintain comprehensive books and records relating to any Services performed under this Agreement, which shall be retained by the Contractor for a period of at least four.
(4) years from and after the completion of such Services. The owner, or its authorized representatives, shall have the right to audit such books and records at all reasonable times upon prior notice to the Contractor. The provisions of this paragraph shall survive the expiration or early termination of this Agreement.

9. ASSIGNMENT. This Agreement is for the personal services of Contractor and may not be assigned by Contractor in any fashion, whether by operation of law or by conveyance of any type including, without limitation, transfer of stock in Contractor, without the prior written consent of Owner, which consent Owner may withhold in its sole discretion. Owner retains the right to assign all or any portion of this Agreement at any time. Upon such assignment, and provided the Assignee shall, in writing, assume Owner's obligations under this Agreement, the Owner shall be automatically released and discharged from any of its obligations under this Agreement, and the Contractor shall thenceforth look solely to the Assignee for the performance of Owner's obligations under this Agreement.

10. SUSPENSION OR TERMINATION. Anything in this Agreement, to the contrary notwithstanding, the Owner shall, in its sole discretion and with or without cause, have the right to suspend or terminate this Agreement upon seven (7) days prior written notice to the Contractor. In the event of termination, the Owner's sole obligation and liability to the Contractor, if any, shall be to pay to the Contractor that portion of the fee earned by it, plus any earned amounts for extra Services performed under Articles 3 and 6, through the date of termination, plus any Reimbursable Expenses incurred (to the extent these are expressly allowed under Article 3).

11. SUBCONTRACTORS. If the Contractor desires to employ Subcontractors in connection with the performance of its Services under this Agreement:

a. Nothing contained in the Agreement shall create any contractual relationship between the Owner and any Subcontractor. However, it is acknowledged that the Owner is an intended third-party beneficiary of the obligations of the Subcontractors related to the Services.

b. Contractor shall coordinate the services of any Subcontractors and remain fully responsible under the terms of this Agreement; Contractor shall be and remain responsible for the quality, timeliness, and coordination of all Services furnished by the Contractor or its Subcontractors.

c. All subcontracts shall be written. Each subcontract shall contain a reference to this Agreement and shall incorporate the terms and conditions of this Agreement to the full extent applicable to the portion of the Services covered thereby. Each Subcontractor must agree, for the benefit of the Owner, to be bound by, such terms and conditions to the full extent applicable to its portion of the Services.

12. NOTICE.

a. Notices required or permitted to be given under this Agreement shall be in writing, may be delivered personally or by mail, telex, e-mail, cable, or courier service, and shall be deemed given when received by the addressee. Notices shall be addressed as follows:

Owner: CROA
851 Celebration Avenue
Celebration, FL 34747

If to Contractor: Contractor ABC
PO Box 123

or to such other address as either party may direct by notice given to the other as hereinabove provided.

b. Notwithstanding the foregoing, any notice sent to the last designated address of the party to whom a notice may be or is required to be delivered under this Agreement shall not be deemed ineffective if actual delivery cannot be made due to a change of address of the party to whom the notice is directed or the failure or refusal of such party to accept delivery of the notice.

13. LEGAL PROCEEDINGS.

a. The Agreement shall be construed and interpreted by the laws of the State of Florida and shall constitute the entire and sole understanding of the parties hereto notwithstanding any prior or written statements, instructions, agreements, representations, or other communications.

b. Any legal proceeding of any nature brought by either party against the other to enforce any right or obligation under this Agreement, or arising out of any matter about this Agreement or the Services to be performed hereunder, shall be submitted for trial, without a jury, before the Circuit Court of the Ninth Judicial Circuit in and for Orange/Osceola County, Florida; or, if the Circuit Court does not have jurisdiction, then before the United States District Comi for the Middle District of Florida (Orlando Division); or if neither of such courts shall have jurisdiction, then before any other court sitting in Osceola County, Florida, having subject matter jurisdiction. The premises consent and submit to the jurisdiction of any such court and agree to accept service of process outside the State of Florida in any matter to be submitted to any such court pursuant hereto, and expressly waive all rights to trial by jury regarding any such matter.

c. If any provision of the Agreement is judicially construed to be invalid by a court of competent jurisdiction, such provision shall then be construed in a manner allowing its validity or, if this leads to an impracticable result, shall be stricken but, in either event, all other provisions of the Agreement shall remain in full force and effect.

14. MISCELLANEOUS PROVISIONS.

a. Any failure by the Owner to require strict compliance with any provision of this Agreement shall not be construed as a waiver of such provision, and the Owner may subsequently require strict compliance at any time, notwithstanding any prior failure to do so.

b. The acceptance of final payment under this Agreement, or the acceptance of final payment upon early termination hereof, shall constitute a complete release of Owner by Contractor fom any claims, demands, and causes of action whatsoever which Contractor may have against Owner in any way related to the subject matter of this Agreement and Contractor shall as a condition precedent to receipt of final payment fom Owner, submit to the Owner a fully and properly executed General Release, in the form attached to this Agreement. Neither the Owner's review, approval, or acceptance of, nor payment for, any of the Services required under this Agreement shall be construed to operate as a waiver of any rights under this Agreement or any cause of action arising out of the performance of this Agreement, and Contractor shall be and remain liable to Owner by law for all damages to Owner caused by the Contractor's performance of any of the Services furnished according to this Agreement.

c. It is understood and agreed that the Contractor is acting as an independent contractor in the performance of its Services hereunder, and nothing contained in this Agreement shall be deemed to create an agency relationship between the Owner and Contractor.

d. The rights and remedies of the Owner provided for under this Agreement are cumulative and are in addition to any other rights and remedies provided by law.

IN WITNESS WHEREOF, the parties have caused this Agreement to be duly executed effective as of the day and year first above written.

Exhibit A
Scope of Services
Contract No.:

See the attached the 29-page Landscape Maintenance Proposal and Authorization for services to the service area - Example Service area.

End of Exhibit A

Exhibit B
Rate Schedule
Contract No.:

The total sum of $_____shall be paid to Contractor upon satisfactory completion, approval by Owner, and receipt of detailed invoice (as bid and attached), invoiced to Owner; in increments of $_____monthly.

End ofExhibit B

Exhibit C
Changed Service Authorization
CQntract_NQ._:

Contract Number: Date:

Service Authorization No.

To:

Under the Services Agreement dated, _____ the Contractor agrees to perform the Changed Services described below for a fee to be computed in the manner set out below or by Article 3 of the Agreement.

Description of Changed Services:

Adjustment to Fee:

Reimbursable:

All claims for Reimbursable Expenses (to the extent those are expressly allowed under Article 3 of our Agreement) must be approved in advance by the Owner.

The total amount of this Changed Service Authorization shall be complete consideration to the Contractor for performance of the Services set forth above and the Contractor hereby waives any claims arising out of or related to the Services covered by this Changed Service Authorization.

The contractor shall commence the aforesaid Changed Services upon the execution hereof and shall perform the same by the terms and conditions of the Agreement which, except to the extent expressly altered or changed in this Changed Service Authorization, remain in full force and effect.

This Changed Service Authorization represents the entire and integrated agreement between the parties, and supersedes all prior negotiations and qualifications, for this change in scope; but this Changed Service Authorization and the Services contemplated herein is, except as otherwise specifically provided herein, subject to all the terms and conditions of the Agreement including without limitation, those concerning payment.

CONTRACTOR	OWNER
Authorized Signature:	Authorized Signature: _____
Print Name: _____	Print Name: _____
Title: _____	Title: _____
Date: _____	Date: _____

Exhibit D
General Release
Contract No.:

FOR AND IN CONSIDERATION OF THE SUM of $_, as FINAL PAYMENT, the receipt and adequacy of which is hereby acknowledged, _____, the undersigned, hereby fully and forever releases, acquits and discharges the Owner, the Owner's Representative, and their agents, employees, consultants, architects, engineers, officers, directors, successors, assigns, separate contractors and their subcontractors and sub-subcontractors, all of whom are hereinafter referred to as "Releasees", from any and all claims, actions, causes of action, liens, rights to claim a lien, suites, expenses, losses and damages (including, without limitation, any and all expenses, losses and damages, for or arising out of direct costs, indirect costs, expenses, overhead, profit, labor, labor impacts, materials, supplies, equipment, changes, cardinal changes, cumulative impacts, disruptions, hindrances, interferences, delays, acceleration, inefficiencies, lost productivity, taxes, insurance, bonds, deliveries, supervision, or any other costs, expenses, losses or damages of any nature whatsoever), judgments, and rights whatsoever, in law or in equity, known or unknown, now existing through the date of execution of this General Release or which may hereafter accrue (hereinafter referred to collectively as "Claims") in favor of the undersigned for, by reason of, or arising out of or in connection with any matter, transaction, contract, agreement, occurrence, act, event, cause or thing whatsoever from the beginning of time to the date of this General Release arising out of or in connection with (i) the above-identified Contract or (ii) all work, labor, services, materials, equipment and other items furnished, performed or provided pursuant to said Contract or otherwise for the above- identified Project.

The undersigned covenants that except for actions and suits based upon breaches of the terms of this Release, it shall not commence or prosecute any action or suit in law or in equity, against the Releasees, or any of them, on account of any action or cause of action which now exists or which may hereafter accrue in its favor arising out of or in connection with (i) the above-identified Contract or (ii) all work, labor, services, materials, equipment and other items furnished, performed or provided under said Contract or otherwise for the above-identified Project.

In addition to any other liability that shall accrue upon the breach of the covenants contained herein, the undersigned shall be liable to pay all reasonable attorneys' fees and costs incurred by the Releasees, or any of them, in the defense of any such action or suit brought in violation of the covenant contained in Paragraph 2 hereof.

WITNESS our hands this of, 20_.

WITNESSES:

_____
(Contractor)

1) _____

_____
Signature

2) _____

_____
Print Name/Title

STATE OF _____

COUNTY OF _____

The foregoing instrument was acknowledged before me _____ by _____ of _____ a _____ corporation, on behalf of the corporation. He/she is personally known. to me or has produced as identification and did (did not) take an oath.

_____
Notary Public - State of Florida

Celebration Residential Owners Association, Inc. (CROA)

PROJECT CATEGORY - PARKS & FACILITIES

ADDITIONAL REQUIREMENTS

In addition to the specifications described within the Scope of Work, the following site-specific specifications are required.

The contractor shall provide a designated crew and appropriately sized equipment for landscape maintenance and specialty maintenance of all CROA Parks & Facilities. Attention to detail is imperative.

The work consists of turf maintenance, weeding and edging of ground cover, preventing, and controlling weeds in turf, planters, and hardscape, trimming of shrubs, application of pesticides, hardscape areas, litter collection and disposal, and other activities normally associated with full-service maintenance of parks & recreational facilities.

The Contractor will be responsible for all turf, landscape & irrigation located within all fence pool areas.

Property boundary lines include easements adjacent to each park and facility (typically from the back of the curb or pavement edge to the sidewalk) and shall be maintained as part of this scope.

The following are descriptions and locations of each Park & Facility to be included within the Scope of Work bid.

PARKS

Celebration residents enjoy many neighborhood parks that offer sidewalks, picnic tables, benches, chairs, shade, unique art & fountains, trash, and pet receptacles, drinking fountains, playgrounds, sports courts, pavilions, pergolas & arbors.

The following is a list of parks per neighborhood/village. Community

Parks:
Lakeside
The Commons
North Village Pavilion
Meeting Room
Spring Park
East Crescent

Neighborhood Parks:

Celebration Village
Founders
Savannah Square

South Village
Central Bark

4/3/2024

Roseville Corner
Nash

East Village
Aquila Loop
Greenlawn
The Greens Rec Area
Blue Sage

Artisan Park
Craftsman
Bocci
Amphitheater

Island Village
Homestead
Mews
Gathering
Green
Tidepool Mews
Beach Ridge
Mews
Squiggles Park
Olmstead
Mews

Buildings With Grounds:
Heritage Hall
Roseville Corner

Unleashed Dog Park

REFUSE REMOVAL

TRASH RECEPTACLES & DOGI-POT WASTE STATIONS

The contractor shall empty and install new disposable liners each day of service. Partially filled receptacles must be emptied each service day due to wildlife activity.

Standing water shall be removed from the receptacles.

The contractor shall notify the CROA Representative when additional receptacles are needed or if trash receptacles need painting or replacement due to damage.

The contractor is responsible for the proper placement of trash receptacle lids, locking Dogi-Pot lids, and replenishing dog waste pick-up bags and liners.

Dogi-Pot Waste Stations installed throughout CROA parks and facilities.

SUPPLIES / MATERIALS

The contractor shall supply liners for all trash receptacles using a heavy mill black liner/bag.

CROA shall supply all liners and waste pick-up bags for the Dogi-Pot Waste Stations.

The contractor shall maintain an inventory list indicating the number of liners and bags used each month and the number of supplies in stock which shall be listed in the report submitted to the CROA Representative monthly.

FREQUENCY OF SERVICE – Monday – Friday at the following Facility locations: All Parks notated under the list of parks on page 1.

FACILITIES

Lakeside Park & Pool - 631 Sycamore St

North Village Commons Park & Pool - 215-A Celebration Blvd

Celebration Unleashed Dog Park - 309 Campus St

Spring Park & Pool - 951 Spring Park Street

East Lawn Park & Pool - 820 Oak Shadows Rd

SPORTS COURT'S LOCATIONS

Lakeside Park – 5 Tennis Courts, 1 Basketball Court, 1 Pétanque Court

North Village Commons – 2 Sand Volleyball Courts

Artisan Park – 1 Bocce Court

Sand must be groomed a minimum of (4) four times per week and will include the removal of wildlife fecal matter discovered during the grooming process.

Rake sand areas to a depth of 1.5" – 2.0" to expose any debris for removal.

Grooming shall consist of hand raking the sand to a level surface leaving all edges with a smooth transition between the surrounding surfaces.

The contractor shall monitor the depth and condition of the sand to ensure a minimum of 8" clean white sand is maintained as the Playground Safety Surface. The contractor shall include the depth and condition of the sand within the monthly report submitted to the CROA Representative.

SYNTHETIC TURF PLAYGROUND SURFACE

The contractor shall clean all debris from the Synthetic Turf Playground Safety Surface using a blower or vacuum and shall check for and remove all safety surface hazards.

FREQUENCY OF SERVICE - Monday through Friday at the following playground locations:

North Village Commons, Spring Park, East Lawn Park & Long Meadow Park

2024 CROA PARKS PROJECT LIST EXHIBIT C

End of Scope

PARKS & FACILITIES

Celebration Residential Owners Association, Inc. (CROA)

REQUEST FOR PROPOSAL FOR LANDSCAPING PARKS AND FACILITIES

RFP # PARKS2-03102023

Celebration Residential Owners Association

Issued by:

CELEBRATION RESIDENTIAL OWNERS' ASSOCIATION, INC. (CROA) BOARD OF DIRECTORS

851 CELEBRATION AVE
CELEBRATION, FLORIDA 34747

JEFFREY WEBB, COMMUNITY MANAGER
BRAYAN SENQUIS, DIRECTOR OF PARKS AND FACILITIES

407-566-1200

CELEBRATION.FL.US

Date Issued: Friday March 15th, 2024.

Due Date/Time: Friday, April 5th, 2024, at 3:00 PM

TABLE OF CONTENTS

- PROJECT CATEGORY LIST
    - PARKS AND FACILITIES
- PROPOSAL SUBMITTAL REQUIREMENTS
- PROPOSAL FORMS
- SCOPE OF WORK EXHIBIT A - PICTURES/MAPS
- PARKS PRICING SHEET / PRICING EXHIBIT B WORKSHEET/ PROJECT CATEGORY EXHIBIT C
- SAMPLE SERVICE AGREEMENT ONCE AWARDED TO BE COMPLETED

GENERAL INFORMATION

The scope of work consists of complete landscape, turf, irrigation, and specialty maintenance of Parks and Facilities within Celebration. The work consists of turf maintenance, weeding and edging of ground cover, preventing, and controlling weeds in turf, planters, and hardscape, trimming of shrubs, application of pesticides, hardscape areas, litter collection and disposal, and other activities normally associated with full-service maintenance at the Parks and Facilities.

CROA reserves the right to award contracts for any work that requires a separate bid based on the nature of the work and its anticipated costs.

FORMS & SPECIFICATIONS

Submitters are required to use the official "PROPOSAL FORMS", and all attachments itemized herein are to be submitted as a single document. Any variation from the minimum specifications must be clearly stated on the PROPOSAL FORMS.

HOW TO SUBMIT A PROPOSAL

One complete proposal form set 1 original with all required documents as itemized and included herein is to be submitted in a sealed envelope, on the outside of which shall be prominently marked with the following identification: "RFP # PARKS2-04122024" with the name and address of the submitter. The RFP should be neat, professional in appearance, and bound appropriately for the document's thickness. The original document shall have original signatures and noted with *ORIGINAL* on the cover. All proposals must be hand delivered and/or mailed to CROA at 851 Celebration Ave, Celebration, FL 34747, by the date and time set forth herein. A copy must also be emailed to the CROA Representative at Jeffrey.webb@townhall.celebration.fl.us. Please include the EXCEL unit pricing file.

CONTRACTOR RESPONSIBILITY

Submitters are fully and completely responsible for the labeling, identification and delivery of their proposals. CROA will not be responsible for any mislabeled or misdirected submissions, nor those handled by delivery persons, couriers, or the U. S. Postal Service.

- Submissions shipped by express delivery, or in overnight or courier envelopes, boxes, or packages must be prominently marked on the outside of such envelopes, boxes or packages with the sealed proposal identification.

- Proposals that are incomplete, unbalanced, conditional, obscure, or which contain additions not called for, alterations, or irregularities of any kind, or which do not comply with these documents may be rejected at the option of CROA.

PROPOSAL DOCUMENTS REQUIRED

The following documents and forms in the following arrangement must accompany each proposal or alternate proposal submitted:

- Bid Response Form/Pricing Worksheet/Pricing Sheet Exhibit B/ A Copy of Exhibit A " Scope of Work" attached and signed and dated. Exhibit C " Project Category sheet signed and dated.

- Disclosure of Subcontractors, Sub-Consultants and Suppliers

- Proposer Certification/Addenda Acknowledgment Form.

- The General Terms and Conditions statement must be signed and returned with the proposal form.

- A sworn, notarized Statement of the Contractor's Experience, Equipment, and Personnel.

- W-9

- Any applicable licenses or certifications must be included. This can also include any additional certifications or education of the organization or of staff who will be performing the actual work.

INSURANCE REQUIREMENTS

A Certificate of Insurance will be furnished by the successful Contractor upon Notice of Award. The Certificate(s) shall be completed by the Contractor's authorized agent and submitted to CROA, with CROA a named additional insured. The successful Contractor shall not commence any work in connection with the Agreement until it has obtained all the following types of insurance and shall maintain such insurance as will protect him/her from claims that may arise out of or result from the vendor's operations under the terms and conditions of the RFP.

Contractor shall, throughout the performance of its Services under this Agreement, maintain:

a. Occurrence basis comprehensive general liability insurance (including broad form contractual coverage) and automobile liability insurance, with minimum limits of $1,000,000, respectively, combined single limit per occurrence, protecting it and Owner from claims for bodily injury (including death) and property damage which may arise from or in connection with the performance of Contractor's Services under this Agreement or from or out of any act or omission of Contractor, its officers, directors, agents, and employees; and

b. Workers' compensation insurance as required by applicable law (or employer's liability insurance concerning any employee not covered by workers' compensation) with minimum limits of One Hundred Thousand Dollars ($100,000) per occurrence.

All such insurance required in Paragraph a. shall be in companies and on forms acceptable to the Owner and shall provide that the coverage thereunder may not be reduced or canceled unless thirty (30) days prior written notice thereof is furnished to the Owner. Certificates of insurance (and copies of all policies, if required by the Owner) shall be furnished to the Owner. In the event of any cancellation or reduction of coverage, the Contractor shall obtain substitute coverage as required under this Agreement, without any lapse of coverage to the Owner whatsoever.

The contractor shall defend (if requested by Owner), indemnify and hold the Owner and its officers, directors, agents, employees, and assigns harmless from and against any claims, demands, suits, judgments, losses, or expenses of any nature whatsoever (including attorneys' fees) arising directly or indirectly from or out of: any act or omission of Contractor, its officers, directors, agents or employees; any breach of Contractor's representations as outlined in this Agreement; or any other failure of Contractor to comply with the obligations on its part to be performed under this Agreement. The provisions of this paragraph shall survive the expiration or earlier termination of this Agreement.

CROA reserves the right to modify the insurance requirements set forth at any time during the process of solicitation or subsequent thereto.

EXAMINATION OF PROPOSAL DOCUMENTS

- Each Contractor shall carefully examine the Documents & Specifications and other applicable forms and inform himself/herself thoroughly regarding any conditions and requirements that may in any manner affect the cost, progress, or performance of the work to be performed under the Contract. Ignorance on the part of the Contractor will in no way relieve him/her of the obligations and responsibilities assumed under the Contract.

- Should a Contractor find discrepancies or ambiguities in or omissions from the Specifications, or should he/she be in doubt as to their meaning, he/she shall at once notify the Operations Manager, in writing.

INTERPRETATIONS, CLARIFICATIONS AND ADDENDA

In case any Proposer fails to acknowledge receipt of such addenda or addendum, his/her proposal will nevertheless be construed as though it had been received and acknowledged and the submission of his/her Proposal will constitute acknowledgment of the receipt of same. All addenda are a part of the Proposal Documents, and each Proposer will be bound by such addenda, whether received by him/her. It is the responsibility of each Proposer to verify that he/she has received all addenda issued before Proposals are opened.

In the case of unit price items, the quantities of work to be done and materials to be furnished under this Proposal/Contract are to be considered as approximate only and are to be used solely for the comparison of Proposals received. CROA does not expressly or by implication represent that the actual quantities involved will correspond exactly therewith; nor shall the Proposer plead misunderstanding or deception because of such estimate or quantities of work performed or material furnished by the Specifications and other proposal documents, and it is understood that the quantities may be increased or diminished as provided herein without in any way invalidating any of the unit or lump sum prices proposal.

ALTERNATES

When certain items of equipment and/or materials are specified and/or described as the product of a particular manufacturer together with any required additional information such as model number, size, or catalog number, only such specific items may be used in preparing the Proposal, except as hereinafter provided.

CHANGES / MODIFICATIONS

CROA reserves the right to order changes in the scope of work and resulting contract. The successful Proposer has the right to request an equitable price adjustment in cases where modifications to the contract under the authority of this clause result in increased costs to the Contractor. Price adjustments will be based on the unit prices proposed by the Contractor in response to this solicitation. Any contract resulting from this solicitation may be modified upon written and mutual consent of both parties.

GOVERNING LAWS AND REGULATIONS

The Proposer is required to be familiar with and shall be responsible for complying with CROA Policies and Procedures, CROA rules, all federal, state, and local laws, ordinances, rules, and professional standards or regulations that in any manner affect this solicitation, the selection process, protests, award of contract, contract management or any other activity associated with this solicitation and the subsequent work required of the successful Proposer.

CONTRACT NEGOTIATION

The Selection Committee shall rank all received proposals and provide the CROA Representative with the rankings and a recommended Contractor(s). If deemed prudent or necessary, the CROA Representative will be authorized to negotiate with the top-ranked firm. The proposal signed by the successful Proposer along with documentation included in the proposal as required by this solicitation and other additional materials submitted by the Proposer and accepted by CROA shall be the basis for negotiation of a contract addressing the requirements of the solicitation. The resulting contract will be approved by the CROA Board of Directors.

ADDITIONAL TERMS AND CONDITIONS

No additional terms and conditions included with the proposal response shall be evaluated or considered and any such additional terms and conditions shall have no force and effect and are inapplicable to this proposal. If submitted either purposefully through intent or design or inadvertently appearing separately in transmitting letters, specifications, literature, price lists or warranties, it is understood and agreed the general and special conditions in this solicitation are the only conditions applicable to this proposal and the Proposer's authorized signature affixed to the proposal attests to this.

EVALUATION PROCESS

PROPOSAL EVALUATION

This Request for Proposals includes following all the instructions and procedures in this document and sending the sealed proposal information to CROA by the due date and time. Proposals will be evaluated on the following criteria:

Criteria	Description	Value (points)
Completeness	The proposal is in accordance with the RFP instructions	10
Experience	Contractual and technical of similar size scope	25
Qualifications	Key personnel, labor commitment, training, and certifications	15
Equipment and Staff	Adequate to provide expected high level of service	20
References	Assessment of current project conditions with similar service	10
Cost	Associated with each line item is not over or underpriced	20

CROA reserves the right to apply the evaluation criteria in any manner it deems necessary and to evaluate each firm separately or comparatively, using these criteria in any weight or importance as it sees fit. CROA also reserves the right to seek clarification from prospective firms on any issue in a response, invite specific firms for site visits or oral presentations, or take any action it feels necessary to properly evaluate the submissions and construct a solution in CROA' s best interest. Failure to submit the requested information or required documentation may result in the lessoning of the proposal score or the disqualification of the proposal response.

BID RESPONSE FORM

Company Name: Florida Commercial Care Inc. Contact: Lauren Detjen
Email: Ldetjen@floridacommercialcare.com Phone: 386-478-3913

I Lauren Detjen, on behalf of Florida Commercial Care, submit the following bids as indicated below:

- [X] **Parks and Facilities**
- [ ]
- [ ]

NOTE(S):
When completing your proposal, do not attach any forms which may contain terms and conditions that conflict with those listed in CROA's proposal documents. Inclusion of additional terms and conditions such as those which may be on your company's standard forms may result in your proposal being declared non-responsive.

All price information to be used in the RFP evaluation must be on this proposal form.

CROA reserves the right to adjust any quantity upward or downward as may be warranted or necessary.

"The undersigned, as Proposer, hereby declares that he/she has informed himself/herself fully regarding all conditions for the work to be done and that he/she has examined the RFP and Specifications for the work and comments hereto attached. The Proposer agrees, if this proposal is accepted, to contract with CROA in the form of an Agreement, to furnish all necessary materials, equipment, machinery, tools, apparatus, means of transportation, labor, and service necessary to complete the work covered by the RFP and Contract Documents for this Project. The Proposer agrees to accept in full compensation for each item the prices named in the schedules incorporated herein.

Proposer agrees to supply the products or services at the prices proposed above per the terms, conditions, and specifications contained in this RFP."

Executed by:

Lauren Detjen	Sales Representative	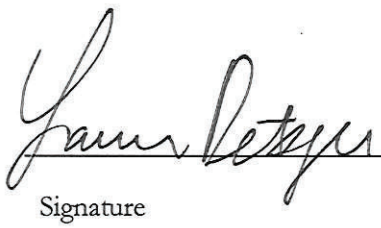	4/4/2024
Agent Name	Title	Signature	Date

This document must be completed and returned with your Submittal.

DISCLOSURE OF SUBCONTRACTORS AND SUPPLIERS

Name of Firm Submitting Proposal:

Florida Commercial Care Inc

(Print or Type)

Name of Person Submitting Proposal:

Lauren Detjen

(Print or Type)

Name of Firm Submitting Proposal:

(Print or Type)

Name of Person Submitting Proposal:

(Print or Type)

Please list all Subcontractors and Suppliers to be used in connection with the performance of this contract. Attach additional sheets as necessary.

Name of Firm or Agency: Address: Florida Commercial Care Inc	Telephone: 386-478-3913
Contact Name: Lauren Detjen	Title: Sales Representative

This document must be completed and returned with your Submittal.

Name of Firm or Agency: Address:	Telephone:
Contact Name:	Title:

Name of Firm or Agency: Address:	Telephone:
Contact Name:	Title:

Name of Firm or Agency: Address:	Telephone:
Contact Name:	Title:

Name of Firm or Agency: Address:	Telephone:
Contact Name:	Title:

This document must be completed and returned with your Submittal.

STATEMENT OF CONTRACTOR'S EXPERIENCE, EQUIPMENT AND PERSONNEL

(The contractor may also provide any supplemental company or personnel information that will assist CROA in evaluating your proposal such as a corporate organizational chart showing area of responsibility for personnel listed on this form).

CONTRACTOR: Florida Commercial Care Inc

DATE: 4/4/2024

1. How many years has your organization been in business as a landscape & irrigation contractor under your present business name?

   32 years

2. List all previous business names of your organization:

   No other names

3. How many years of experience in landscape and irrigation installation?

   Prime Contractor: 32 years

   Subcontractor: No Subcontracting

4. List all officers and directors of your organization:

Name	Position Held
Stephen McDowell	Owner & CEO

5. Have you ever failed to complete any work awarded to you in the last 3 years? ____ Yes X No

   If yes, where and why?

This document must be completed and returned with your Submittal.

EXPERIENCE

1. Describe any experience of the principal individuals (Foremen, Superintendents, etc.) who are responsible for the actual landscape & irrigation installation work of your organization?

David Carlson	Director of Operations Florida	
Name	Position	
Landscaping and Lawn Maintenance	28 year	3
Type of Work	Years' Experience	Years with Firm
ClairCunningham	Director of Irrigation Florida	
Name	Position	
Landscaping, Lawn and Irrigation	10 years	5 years
Type of Work	Years' Experience	Years with Firm
James Clayton	Landscape Maintenance Account Manager	
Name	Position	
Landscaping and Lawn Maintenance	18	18 year
Type of Work	Years' Experience	Years with Firm
Dominick Dichiria	Landscape Enhancement Manager	
Name	Position	
Landscaping and Lawn Maintenance	15	5 years
Type of Work	Years' Experience	Years with Firm

2. List/describe five (5) landscape and irrigation contracts/projects of similar size and scope that you currently have or have recently completed.

Project: Reunion Resorts	Location: Davenport, Florida
Date: 12/1/2018 to Present	Contract Amount:
Contract Name, Phone Number, Fax Number: Anthony Carll General Manager Email: acarll@KWIResorts.com	$1,900,000.00 +

This document must be completed and returned with your Submittal.

Project: Publix	Location: Throughout the State of Florida
Date: 2018 - Present Contract Name, Phone Number, Fax Number: Shawn Downey PH: 863-661-2307	Contract Amount: 1,800,000.00 +

Project: Publix Service Locations	Location: Central Florida
Date: Contract Name, Phone Number, Fax Number: Joel Mann PH: 863-581-4044	Contract Amount: 1,200,000.00 +

Project: Sandy Ridge CDD	Location: Central Florida
Date: Contract Name, Phone Number, Fax Number: Jennifer Scalerico Email: Jennifer@BreezeHome.com	Contract Amount: $90,000.00+

Project: Breeze Homes, Lagoons CDD	Location: Wimauma and Pasco County, Florida
Date: Contract Name, Phone Number, Fax Number: Michael Sakellarides PH: 813-565-4663	Contract Amount: $780,000.00 +

	Location:
Date: Contract Name, Phone Number, Fax Number:	Contract Amount:

This document must be completed and returned with your Submittal

EQUIPMENT & MATERIAL RESOURCES

List equipment owned (types and number of). A separate list is acceptable (i.e. spreadsheet).

1.	Tree Bucket Trucks x2	9.	72 inch Mowers x6
2.	Skid Steer x1	10.	Edgers x75
3.	Kubota x1	11.	Hedge Trimmers x70
4.	Full Size Dump Trucks x12	12.	Blowers x 73
5.	Dump Trailers x4	13.	Weed Eaters x78
6.	36 inch Mowers x18	14.	Lawn Trailers x22
7.	52 inch Mowers x16	15.	Lifts 38' to 60' x4
8.	60 inch Mowers x12	16.	Utility ATV Carts x14

CONTRACTOR'S AFFIDAVIT

State of Florida
County of PASCO

Before me appeared Stephen McDowell who (title) is owner of *(the company described herein)* Florida Commercial Care being duly sworn deposes and say that the foregoing statements are a true and accurate statement of the position of the said organization as of the date thereof, and, that the statements and answers to the foregoing experience questionnaire are correct and true as of the date of this affidavit; and, that he/she understands that intentional inclusion of false, deceptive, or fraudulent statements of this application constitutes fraud; and, agrees to furnish any pertinent information requested by CROA deemed necessary to verify the statements made in this application or regarding the ability, standing and general reputation of the applicant.

Personally Known X or Produced Identification _____

Sworn to and subscribed before me this 4/4 day of, 2024

VANESSA M. TREVIÑO
Notary Public
State of Florida
Comm# HH306111
Expires 8/29/2026

NOTARY PUBLIC – STATE of FLORIDA
(Signature of Notary Public)

Vanessa Treviño
(Print Name of Notary Public)

This document must be completed and returned with your Submittal.

"Exhibit A" LANDSCAPE

SCOPE OF SERVICES

SCOPE OF WORK

The scope of work consists of complete landscape, turf, irrigation, and specialty maintenance of specified parks & facilities, within Celebration. The work consists of turf maintenance, weeding and edging of ground cover, preventing, and controlling weeds in turf, planters, and hardscape, trimming of shrubs, application of pesticides, hardscape areas, Trash collection and disposal, and other activities normally associated with full-service maintenance of parks, recreational facilities and residential single-family units.

CROA reserves the right to award contracts for all work that requires a separate bid process based on the nature of the work and its anticipated costs.

The contractor shall have a period of thirty (30) days from the date of commencement to perform a thorough audit of all turf, plant material, beds, planters, hardscape, and irrigation systems. A report listing all items that do not meet the specifications of this Scope of Work must be submitted to the CROA Representative.

Deficiencies noted within the report will be reviewed by the CROA Representative for verification and actions required. Upon approval by the CROA Representative, either the deficiencies will be corrected or documented to not become the responsibility of the Contractor to address them without additional compensation.

After the thirty (30) day audit period has expired and for the duration of the contract, the Contractor shall assume responsibility for all unreported maintenance deficiencies, including materials and labor.

WORK SCHEDULE

The Contractor shall accomplish all normal work required under this contract between the hours of 7:00 a.m. and 7:00 p.m., Monday through Friday. The CROA Representative may grant, on an individual basis, permission to perform contract maintenance at other hours. No maintenance functions shall commence before 7:00 a.m. and after 7:00 p.m.

Work will be scheduled so that it will not disrupt the functions and normal day-to-day operations of the parks and the facilities located within them.

No work will be performed on weekends without prior written approval of the CROA Representative.

The contractor will be required to provide maintenance at a specific time at certain locations such as parks and sports fields located within the K-8 school facility.

The Contractor shall provide the CROA Representative with monthly calendar work schedules 5 days before the 1st day of each month. Schedules must include the name of the Supervisor(s) who will oversee the work performed and the telephone number(s) by which to contact him/her.

The work schedules must reflect adequate time for completion of all routine work activities on a daily, weekly, and monthly basis, as well as seasonal work activities on an annual basis which comply with the specification requirements indicated throughout this document. The schedule shall also indicate any special work assignments i.e., pesticide application, tree trimming, plant/turf replacement, mulching, etc.

Failure to submit schedules within the time frame specified shall result in a penalty of $100 per occurrence, per schedule for each calendar day until schedules are received.

The contractor shall complete all work during the calendar week in which it is scheduled unless circumstances occur that are beyond the control of the Contractor and approved by the CROA Representative. All scheduled work NOT completed during the week shall be reported to the CROA Representative in writing by 4:00 PM Friday of the same week.

PROJECT CATEGORIES

PARKS & FACILITIES

Reference Project Category "PARKS & FACILITIES" for site-specific maintenance requirements.

TERM OF CONTRACT

The term of this Agreement shall be May 1st, 2024, through April 30th, 2027, with the option to renew for two (2) additional one (1) year periods. The prices proposed by the Contractor shall remain fixed and firm for the duration of the Agreement.

Before each renewal period, the Contractor will be evaluated based on their performance.

The landscape maintenance contractor shall be responsible for all labor, materials, and equipment necessary for the proper care and maintenance of the landscaping, irrigation, and related park details and landscaping systems as outlined within this scope.

The following specifications are set as the minimum to achieve the desired healthy and attractive landscaping within the community.

OPERATIONS AND COMMUNICATIONS

SITE CLEANLINESS AND CONDITION

As much as possible, all areas shall be kept free of litter, landscape, and or construction debris. It is expected that during the routine performance of the different maintenance operations the Contractor and workers are to be aware of site conditions and keep a neat and clean appearance. Cleanup of trash and debris shall be performed 5 days per week throughout the year.

SAFETY

All Contractor and Subcontractor personnel shall wear personal protective equipment in the performance of their duties including safety vests, protective eyewear or face shields, respiratory protection as necessary, gloves, and protective clothing.

The contractor shall be responsible for adhering to all local, state, and federal safety guidelines and observe all

safety precautions when performing services on CROA property, roadways and rights-of-way to include safe location of parked vehicles, use of safety cones, signage, flag personnel as necessary, use of safety vests on all personnel and vehicles which are clearly identifiable as belonging to the Contractor.

MEETINGS

The Contractor shall meet with the CROA Representative as appropriate, **every week**. Those meetings shall serve as a forum for the exchange of information, identification of pertinent and critical issues, determination of an action plan and schedule for resolving those issues, review of schedule, and discussion of other landscape, irrigation and maintenance-related issues deemed appropriate by the CROA Representative or the Contractor. The CROA Representative shall provide the meeting location.

The contractor shall provide a representative to attend the monthly meeting of the CROA Board of Directors meetings and shall be able to respond to any questions the Board may have as to the day-to-day activities at the Project site under this Scope of Work.

QUALITY CONTROL

The CROA Representative, or his designated representative, shall be the sole judge as to the adequacy and quality of maintenance. To ensure consistent quality of the work being performed, the CROA Representative may inspect all areas covered by this contract within 24 hours after work is scheduled to be performed. Any deficiencies shall be recorded and submitted to the Contractor for review and corrective action. After the correction period allowed has passed, the CROA Representative shall re-inspect the deficient work and any deficiencies not corrected shall result in the value of the work deducted from the monthly payment to the Contractor. The bid prices quoted by the Contractor unit pricing and/or Extra Work Pricing Sheets shall be used to determine the dollar value of any deficiencies.

Within three (3) calendar days (72 hours) after being notified by the CROA Representative in writing of defective or unacceptable work, if the Contractor fails to correct such work, CROA may cause the unacceptable or defective work to be corrected. If CROA corrects the work, CROA shall be entitled to deduct from any monies due, or which may become due to the Contractor, the reasonable cost of remedying the defective or unacceptable work including an administration fee per occurrence. Provided, however, if the corrective work cannot reasonably be completed within such three (3) day period, and the Contractor immediately begins corrective work, and CROA.

reasonably determines that the Contractor is diligently pursuing the completion of such corrective work, CROA agrees to allow the Contractor to complete correction of the defective or unacceptable work. In addition, if the Contractor, for any reason, fails to perform any portion of the services required by the Contractor under this Agreement, CROA shall be entitled to deduct from any monies due or which may become due to the Contractor the actual expenditures that are necessary to complete the services not performed.

The Contractor will make **weekly in-person visual reviews** of the entire site with a focus on current conditions and the Contractor's performance. The Contractor will make repairs and adjustments on time.

REPORTS

A **Weekly Maintenance Report due each Friday by 4:00 PM** shall be generated by the Contractor and submitted via email to the CROA Representative outlining potential problem areas and the Contractor's proposed corrective action, upcoming work approval request, coordination, scheduling, etc.

The Contractor shall address MyCelebrationFl work orders, as submitted by residents and staff daily, and provide updates utilizing the MyCelebrationFl App.

SUBCONTRACTING

The Contractor may subcontract certain procedures or operations only with the written approval of CROA. Proof of proper licensing and insurance must be provided to CROA before final approval. The Contractor is held responsible for any work performed by any subcontractor engaged.

WORKFORCE

It is desired that the Contractor employees be dressed uniformly with the company identification. Vehicles should be easily identified as well. A neat and clean appearance should be maintained as much as possible.

Contractor employees should be instructed to be helpful and courteous to residents, other employees, and visitors.

As per Federal laws and guidelines, all Contractors must only employ individuals who are legally authorized to work in the United States of America. Any Contractor who enters into a contract with CROA hereby acknowledges that the Contractor only employs individuals who are legally authorized to work in the United States and to the extent that the Contractor is employing individuals who are not legally authorized to work in the United States, it is understood that CROA will not be responsible for any violations of Federal law and the Contractor, solely, will be responsible and liable for any violations and or penalties associated with such violation.

KEYS/ACCESS CARDS

CROA will issue keys and access cards as necessary for access to the work area. The contractor must assume full responsibility for theft or loss of said keys and cards and must pay for re-keying ALL locks operated by these keys or the replacement cost for access cards. Keys must not be duplicated.

LOST & FOUND

The contractor must ensure that articles found by its employees and/or subcontractors are returned to the CROA Representative or Town Hall upon discovery.

PARKING

Contractors' vehicles and trailers shall be parked where they do not impede traffic or visibility at an intersection, roundabout, or on a roadway. All necessary safety precautions are to be observed when the Contractor's personnel are working in or around roadways.

SUPERVISION

The Contractor shall provide supervision of all maintenance and or repair work being performed. Supervisors shall be able to communicate problems to the CROA Representative at any time and shall always be easily accessible to the Representative by cell phone. CROA shall be notified of any change in supervisory personnel immediately.

The Contractor shall provide a knowledgeable, experienced, and well-rounded dedicated maintenance supervisor to oversee each major CROA contract area or collection of areas ranging from $250,000 to $750,000 in yearly maintenance contract work.

A monthly walk-through with the CROA Representative shall be performed to cover work being accomplished, special needs or concerns, and other related information.

If needed, additional supervision or a change of supervisory personnel will be requested should contract performance fall below the acceptable standard.

A good working relationship with other maintenance contractors is to be established and maintained.

ADDITIONAL WORK

From time-to-time additional work may be requested of the Contractor by the CROA Representative. A cost estimate, schedule, or other determining information may be required before approval of the work is to be granted. Each situation will be considered on a case-by-case basis. All additional work shall be completed promptly.

CHANGES

It is expected that development growth will necessitate additional areas to be routinely maintained under the same specifications, or as amended by the CROA Representative. It is the intent to be able to add or delete areas as necessary with the related cost increases or decreases to be handled through the implementation of a change order approved by the CROA Representative. CROA does reserve the right to disapprove any changes. In such cases other contractors may be engaged for the change. Any changes shall be in writing to be legally binding on both parties. No payment shall be made for invoices that do not have written authorization so documented.

SATISFACTORY PERFORMANCE

It is estimated that the frequency and guidelines outlined in this Exhibit will provide the quality desired. However, in the event it does not, the Contractor agrees to provide such reasonable additional services without further compensation. Satisfactory performance of work under this contract shall be based on these maintenance specifications, as measured by the Owner at its discretion.

The determination of satisfactory performance will be based upon the satisfactory appearance of the grounds, not whether anticipated projections of cycle frequencies have been performed. The appearance and quality of the grounds will be reviewed periodically by the CROA Representative. Contractor performance will be evaluated and adjustments to the technical maintenance specifications, if required, will be made.

It is recognized that at times, the development of new areas will damage or deter the maintenance of existing areas. Seasonal weather differences may cause some variation in vegetation growth characteristics and different stages during the care cycle may vary from the desired appearance.

Any plant, tree, grass, or shrub that dies due to the Contractor's negligence shall be replaced by the Contractor, except in instances involving acts of God, theft, vandalism, or the negligence of others, in which case the plants may be replaced at the CROA Representatives direction at no additional cost to the Contractor. Such damage should be reported to the CROA Representative in the weekly report.

Any damage to walls, landscape, lighting, or hardscape features by the Contractor shall be repaired by the respective tradesmen initiated through the CROA Representative so all warranties remain effective. All billing for said repairs will be directed to the Contractor responsible for the said area and cost of repairs.

If the Contractor's performance falls below a level not acceptable by CROA standards, the Contractor will be graded on a scale from 0-3 where 0 is "Unacceptable" and 3 is "Excellent". If the Contractor scores below a two on the monthly audit, they have three business days to fix the unacceptable item. If the contractor scores an overall score of two or lower three times during the contract, an action plan of correction will be required which could lead to the potential cancelation of the contract. "Please find the inspection form utilized attached".

MAINTENANCE FOR VISIBILITY AND SAFETY

All landscaping shall be maintained in a manner that allows clear passage of vehicles and pedestrians, provides open visibility where necessary for safety, and does not obstruct lighting.

Clear visibility in both daytime and nighttime is of the utmost importance for parking areas, driveways, and intersections of all types.

Trees and shrubs shall not be allowed to grow into or over sidewalks, cart paths, public or private streets, driveways, or parking areas in any way that conflicts with the safe passage of pedestrians and vehicles.

A minimum of ten (10) feet of vertical clearance shall be maintained. This shall be increased to fifteen (15) feet where necessary for the passage of taller vehicles—such as vans, buses, or trucks—in areas that must be used by such vehicles.

In general, hedges and shrub masses shall be maintained at a maximum height of three (3) feet in all areas.

views must be maintained for the safety of vehicular and pedestrian traffic. However, the property owner shall visually inspect the site (doing so on a routine basis) to determine whether safe visibility requires maintenance at a lower height, in any given situation.

Individual plants or specimens that do not specifically impede safe visibility may conform to the other applicable standards of these specifications.

Trees near light poles shall be maintained as they grow to avoid impeding safe light levels, to the greatest extent possible.

Pruning of all landscaping shall comply with the proper techniques outlined in these specifications, based on the type of plant material. But in all cases, ensuring safe visibility shall be the prevailing objective.

Areas intended as open space enjoyment will be retained in their natural states and managed for fire protection, noxious weeds, and erosion control as appropriate for the intended use, and natural surroundings.

Prune and maintain all-natural vegetation five (5) feet from the edge of sports fields, turf, sidewalks, fence lines, and parking areas.

Where natural wooded areas adjoin the finished turf areas and landscape beds, a buffer zone of at least three (3) feet shall be maintained with herbicide and or mechanical means.

TURF MAINTENANCE

BAHIA, ST. AUGUSTINE & ZOYSIA TURF

Mowing of all Bahia, St. Augustine, and Zoysia turf areas shall be performed every week during the normal growing season (March through October). During the months of November through February, it is expected that mowing will be required twice a month unless abnormal conditions arise. In any event, the turf shall be mowed at a frequency to always promote healthy and continued growth as well as proper appearance.

BERMUDA TURF

Bermuda turf shall be cut two (2) times per week during the months of March through October and one (1) time per week from November through February unless abnormal conditions arise. The turf shall be mowed at a frequency to always promote healthy and continued growth as well as proper appearance.

REEL mowers MUST be used to maintain Bermuda Turf. There will be no exceptions to this requirement.

Mowing patterns shall be varied to minimize wear areas from tires and slippage.

Mowing height shall be based on season and what is horticultural correct for turf type and location.

Turf Type	Height (inches)	Frequency (per year)	Mower Type
Bahia grass	3.0 – 4.0	42	Rotary
Bermuda grass	0.5 - 1.5	88	Reel
St. Augustine grass	2.5 – 4.0	42	Rotary
Zoysia grass	1.5 - 2.5	42	Rotary

If a change in the height of the cut is considered, the CROA Representative must approve such change, in writing, before any height adjustment.
When line trimmers are used, cutting height shall be in conjunction with mowing height. Scalping by either trimmers or mowers will not be acceptable. Damage to trees, shrubs, and signposts is not acceptable.

Any unsightly clippings that remain on the turf, shall be removed after mowing.

Walkways, streets, and parking areas are to be blown or vacuumed free of clippings after each mowing.

LEAVES

If the Contractor is not using a mulching mower, at certain times of the year leaves in turf may need to be removed with a vacuum to avoid having them accumulate in areas of the turf, or get blown into beds, parking lots islands, or residential yards by the mowers. In areas with parking lots associated with landscape maintenance, leaves, and debris are to be either raked or removed with a vacuum. Leaves are not to be blown into landscape beds or down storm drains. If the condition of the turf declines due to failure to remove accumulated leaves promptly, the Contractor is responsible for replacing the turf.

LEAVES – SEASONAL

During the months of February through April leaves, acorns, and debris must be removed from all landscape beds, turf, and hardscape at all Parks, Facilities, and Sports Fields every week. The curbs and streets adjacent to each location are included as part of this scope. Removal by vacuum is preferred; however, raking, blowing, and manual removal will be allowed.

EDGING

All necessary edging operations shall be performed routinely to trim the turf and maintain a well-groomed appearance for all sidewalks, curbs, plant beds, drainage structures, irrigation valve boxes, splice boxes, gate valve boxes, water meter boxes, and other such interfaces between turf and different surfaces.

Bed lines shall be edged to conform to their original design intent, with adjustments being made periodically for the plant growth.

The edge shall occur in conjunction with each mowing cycle. Grass runners shall not exceed one inch in length along sidewalks, curbs, pavements, planting beds, and other such edges.

Upon completion of edging operations, the turf edge shall be neat, clean, and approximately ½ inch from the edge of any pavement, with a minimum depth of 2 inches.

All paved areas and mulched beds shall be free of dirt, clippings, and debris after work is completed.

DISEASE AND PEST CONTROL

All turf varieties shall be reasonably free of pest infestations, fungus, and disease. Regular inspections during normal maintenance operations shall be undertaken by qualified individuals to identify and respond to such conditions.

Proper fertilization, proper watering, and proper drainage shall be practiced promoting plant vigor and resistance to pests and disease.

Chemical application shall be used as appropriate to prevent damage, promote healthy and continued growth, and treat and cure identified problems. All use of chemicals shall comply with all applicable regulatory and safety standards and shall be applied by appropriately trained and licensed pest control specialists. **Areas treated shall have signs posted on all areas treated with chemicals to alert residents, especially those with children and pets.**

WEED CONTROL

Application of herbicides shall be done on a curative "as needed" basis. A pre-emerging herbicide may be used. Broadleaf weeds, sedges, and undesirable grasses shall be kept to a minimum. **Ninety-five percent (95%) weed-free turf shall be expected.**

Sidewalks must be kept free of weeds in the cracks and edges throughout the area. Spray with a non-selective weed killer without a spray tracker dye as needed. The weed pressure will dictate the frequency the sidewalks will need to be sprayed to maintain the cracks weed-free. Caution shall be taken when spraying weeds or grass runners on the homeowners' side of the sidewalk.

FERTILIZATION - TURF

A soil fertility and pH test shall be performed by the Contractor twice a year from several representative areas in the turf and landscape beds at all locations to help in determining the analysis of the product to use in the fertilizer application programs. Copies of these test results must be provided to the owner, with tested locations each time they are performed. **Areas treated shall have signs posted on all areas treated with chemicals to alert residents, especially those with children and pets.**

ST. AUGUSTINE & ZOYSIA

There should be a minimum of four (4) applications of a complete, acid-forming turf fertilizer applied to Zoysia and St. Augustine turf per year.

February (After February 15): (Zoysia and St. Augustine) A standard non-burning complete turf fertilizer containing a minimum of 30% to 40% of the Nitrogen in a controlled release form such as sulfur coated or polymer coated sulfur coated urea. There should be a minimum of 4% Iron, 6% sulfur, and 2% each of Magnesium and Manganese. A lesser amount of Iron will be acceptable if it is in a chelated form. The fertilizer shall be applied at 1 pound of actual Nitrogen per 1000 Square feet of turf.

May: (Zoysia and St. Augustine) Analysis should be determined by soil test results and recommendations.

August: (Zoysia and St. Augustine) Analysis should be determined by soil test results and recommendations.

October: (St. Augustine) Analysis should be determined by soil test results and recommendations.

November: (Zoysia) Analysis should be determined by soil test results and recommendations.

If these recommendations fail to keep the turf a consistent acceptable green color, a soil test should be performed, and the fertilizer blend adjusted accordingly. If the fertilizer does not keep the turf an acceptable green color between applications during the growing season, it may be necessary to provide an extra application of Nitrogen and/or Iron to provide suitable color and may be requested by the CROA representative. This will not be considered an extra to the contract.

All turf fertilizers should be watered in immediately after application whenever possible to prevent Nitrogen loss due to volatilization. Sweep or blow off walks and painted surfaces immediately after application to avoid discoloration. The contractor will also be responsible for sweeping or blowing fertilizer off all walkways, parking lots, roadways, and any affected paved area. Special attention should be taken to ensure that fertilizer does not enter any stormwater retention or drainage feature.

BAHIA TURF

There should be two applications of complete commercial turf fertilizer to Bahia grass areas per year.

March: A standard, non-burning complete turf fertilizer such as 16-0-8 or similar should be applied at one (1) pound of actual Nitrogen per 1000 square feet. (6.25 pounds of product)

September: 9-2-24 with 6% iron, 8 to 10% Sulfur, and 2% each of Magnesium and Manganese at one (1) pound of actual Potassium per 1000 square feet. (4.2 pounds of product) This will help with winter cold tolerance.

If yellowing occurs in between fertilizer applications, a liquid application of 12-0-0 with iron at the label rate, or another chelated iron source should correct the problem.

All chemical applications shall be performed by trained, licensed operators in accordance with applicable local, state, and federal regulations, safety standards, and the manufacturer's instructions.

All fertilizer shall be thoroughly watered in after application.

BERMUDA TURF "HIGH" DEMAND MAINTENANCE SCHEDULE

Month	Description/Product	Rate/Acre
1	15-0-15 Fertilizer 50% slow-release N with Minors	300lbs/Acre full coverage
2	15-0-15 Fertilizer 50% slow-release N with Minors	300 lbs./Acre full coverage
2	0-0-50 Potassium Sulfate	150Lbs/ Acre
2	Pre-Emergent	Per label rate full coverage
3	15-0-15 Fertilizer 50% slow-release N with Minors	300 lbs./Acre full coverage
3	Round-up clay areas and fence lines	
3	Weed control post-emergent	Per label rate full coverage
4	15-0-15 Fertilizer 50% slow-release N with Minors	300 lbs./Acre full coverage
4	Round-up clay areas and fence lines	2% Solution
4	Deep Tine Aerify	
4	Mole cricket control/Fire ants (Top Choice)	87 lbs./Acre full coverage
4	Verti-cut	3/4" deep with 2" spacing
4	Chelated Iron 12-0-0	
5	15-0-15 Fertilizer 50% slow-release N with Minors	300 lbs./Acre full coverage
5	Round-up clay areas and fence lines	2% Solution
Month	**Description/Product**	**Rate/Acre**
6	0-0-50 Potassium Sulfate	150lbs/Acre
6	15-0-15 Fertilizer 50% slow-release N with Minors	300 lbs./Acre full coverage
6	Aerate ¾" coring tines 3"-4" deep	
6	Weed control post-emergent	Per label rate full coverage
6	Round-up clay areas and fence lines	2% Solution
6	Heritage Application	Per label rate full coverage
7	15-0-15 Fertilizer 50% slow-release N with Minors	300lbs/Acre full coverage
7	Round-up clay areas and fence lines	2% Solution
8	15-0-15 Fertilizer 50% slow-release N with Minors	300 lbs./Acre full coverage
8	Round-up clay areas and fence lines	
8	Pre-M	Per label rate full coverage
8	Mole cricket control/Fire ants (Top Choice)	87 lbs./Acre full coverage
9	15-0-15 Fertilizer 50% slow-release N with Minors	300 lbs./Acre full coverage
9	0-0-50 Potassium Sulfate	150Lbs/ Acre
9	Round-up clay areas and fence lines	2% Solution
9	Aerate ¾" coring tines 3"-4" deep	
9	Weed control post-emergent	Per label rate full coverage
10	15-0-15 Fertilizer 50% slow-release N with Minors	300 lbs./Acre full coverage
10	Round-up clay areas and fence lines	2% Solution
11	15-0-15 Fertilizer 50% slow-release N with Minors	300 lbs./Acre full coverage
12	15-0-15 Fertilizer 50% slow-release N with Minors	300 lbs./Acre full coverage
12	Round-up clay areas and fence lines	2% Solution
12	Deep Tine Aerify	

GROUND COVER AND SHRUB MAINTENANCE

SHRUBS

(Indian Hawthorn, Holly, Viburnum, Boxwood, and similar woody ornamentals)
These shrubs shall be pruned only as necessary to maintain their natural habit and growth at specified heights, to remove excessive growth, and to maintain a natural, informal appearance. Individual plants shall be allowed to grow together into one mass, never shaped as individual plants.

As the shrubs mature, individual plants should not be apparent; plants shall be allowed to grow together in a "soft", informal, and un-sheared mass.

At no time shall any shrubs be allowed to impede safe visibility for pedestrians and vehicles.

Maintain most shrubs in pedestrian and parking areas for safety and visibility, usually about 30" +/-, but always as dictated by the circumstances in any specific location. Where larger shrubs are used for screening of specific features, their ultimate heights shall be dictated by the purpose for which they have been used in the plan, and they shall be allowed to reach the effective height and density necessary to serve that purpose. In no instance, however, shall any shrub be allowed to obstruct visibility for traffic and pedestrian safety. Use hand clippers to remove odd, long, or undesirable branches, keeping the shape natural and uniform. Do not prune masses into geometric forms by hand shearing.

Where plants are adjacent to curbs, or where shrub edges are visible, prune exposed edge of mass back in a natural, informal shape; do not shear vertically.

In a massed planting, exceptionally long branches shall be cut back well inside the mass. Selective pruning and thinning of old wood rather than overall shortening shall be done to keep the mass vigorous and healthy. Shearing shall be minimized to avoid stunted tip growth, excessive density, and unnatural outline.

HERBACEOUS "GRASSY" SPECIES

(Society Garlic, Lily-of-the-Nile, Liriope, and similar species)
These groundcovers shall be allowed to grow to their natural height and width; pruning is not necessary. Cultivate to achieve dense mass; maintain separation between ground cover and adjacent plant materials.

Spent flower heads shall be removed regularly, as required for the best appearance.

If more than 50% of a plant is frost-damaged, cut back to remove all dead or damaged foliage after the last frost.

WOODY GROUNDCOVERS

(Parson's Juniper, Blue Pacific Juniper, Lantana, and similar species)
These groundcovers shall be allowed to grow together to form full, natural, informal masses, maintaining separation between adjacent plant materials.

Prune to maintain height at 18" to 24" or as otherwise appropriate for the species, and to prevent masses from overgrowing curbs, sidewalks, and bed edges. Do not allow masses to become overgrown, requiring extensive pruning.

Depending on the degree of possible cold damage, cut back as required after the last frost to achieve intended

growth. Do not prune masses into geometric forms by hand shearing.

Where plants are adjacent to curbs, sidewalks, and bed edges, prune the edge of the mass back in a natural, informal shape; do not shear vertically.

GROUNDCOVERS

(Dwarf Confederate Jasmine, English Ivy, and similar species)
Cultivate vining groundcovers to achieve dense, entwined masses; maintain separation between groundcover and adjacent plant materials, by edging and/or pruning.

Some species, such as Dwarf Confederate Jasmine, once grown to full and dense coverage (which may take 2 or 3 years for some species), may be trimmed at a height of 6" periodically to maintain a dense and consistent level of coverage.

Do not shear masses vertically adjacent to curbs, bed edges, drainage structures, valve boxes, meter boxes, and other such interfaces. The prune exposed the edge of the mass back at a maximum 45-degree angle from horizontal, in a natural, informal shape.

ACCENT PLANTS

(African Iris, and similar species used as accents)
Accent plants should only be trimmed as necessary to remove excessive growth, and shoots while maintaining a natural, informal appearance. As the plant matures, the plants shall be maintained at the intended height of the accent feature, and not allowed to become overgrown or invasive.

Use hand clippers to remove odd, long, or undesirable shoots, and to remove outer pups or shoots from overgrown clumps, keeping the shape natural, loose, and uniform. Do not share.

Accent plants that are damaged by the frost shall have all the damaged foliage removed and, in such cases, the damage affects the entire plant, it shall be cut back to the ground after the last frost.

ORNAMENTAL GRASSES

(Cordgrass, Muhly Grass, Fountain Grass, and similar species)
Ornamental grasses shall be maintained at their natural height and width.

To achieve the best form and appearance, loose, brown, and dead foliage shall be removed in the months of February through March before new spring growth. Severe pruning to the ground is not an acceptable practice and as a result, will require replacement at the Contractor's expense upon discovery.

PRUNING OF GROUND COVER AND SHRUBS

Plant materials and tree limbs must be kept trimmed away from multi-modal transportation paths and sidewalks and at no time should be allowed to encroach on these areas.

Special attention to areas around landscape lighting fixtures shall be given not only to promote lighting effect but to the project of fixtures themselves from damage.

DISEASE AND PEST CONTROL

All plant material shall be reasonably free of pest infestations, fungus, and disease. Regular inspections during normal maintenance operations shall be undertaken by qualified individuals to identify and respond to such conditions. When five (5%) of any individual plant material shows signs of disease, curative action must be taken.

Proper fertilization, proper watering, and proper drainage shall be practiced promoting plant vigor and resistance to pests and disease.

Chemical application shall be used as appropriate to prevent damage, promote healthy and continued growth, and treat and cure identified problems. All use of chemicals shall comply with all applicable regulatory and safety standards and shall be applied by appropriately trained and licensed pest control specialists.

Non-targeted plant material damaged because of improper chemical applications must be replaced upon discovery at the contractor's expense.

WEED CONTROL

Landscape beds are to be kept free <u>"WEED FREE"</u> at all times during the term of this contract. The use of pre-emergent and selective herbicides is required for all Ground Cover Annual Flower beds. The use of pre-emergent and selective herbicides is not required but encouraged. Hand weeding shall be done as necessary. Non-selective herbicides

Apply pre-emergent and post-emergent weed control to all ground cover and shrub beds at the maximum allowable rate per the manufacturer's label. The contractor may apply pre-emergent herbicide at more frequent intervals to manage weed populations at an acceptable level at no additional cost to the CROA.

Application of herbicides shall be done on a curative "as needed" basis. A pre-emerging herbicide may be used. Broadleaf weeds, sedges, and undesirable grasses shall be kept to a minimum.

Areas treated shall have signs posted on all areas treated with chemicals to alert residents, especially those with children and pets.

FERTILIZATION OF GROUNDCOVER AND SHRUBS

Shrubs and groundcovers shall be fertilized four (4) times per year with a complete commercial fertilizer such as 8-2-12, 12-2-14, or 13-3-13 containing a minimum of 25% slow-release Nitrogen, 6% Sulfur, 2% of both Magnesium and Manganese and 3% Iron. This shall be applied in March, May, July, and October at ½ cup per small shrub, 1 cup per large shrub, or 15 to 30 pounds per 1000 square feet of plant bed, depending on the spacing, type of plants, and product used. Fertilizer shall be broadcast evenly over the entire root zone, and care shall be taken to avoid accumulation of fertilizer granules on leaves, crowns, etc.

The fertilizers should be watered in immediately after application whenever possible to prevent Nitrogen loss due to volatilization. Sweep or blow off walls and paint surfaces immediately after application to avoid discoloration. Special attention should be taken to prevent any fertilizer from being blown, swept, or otherwise ending up in any parking lot or roadway storm drain. Any fertilizer that ends up upon any non-target area or hard surface shall be removed and applied to a target area.

TREE MAINTENANCE

CRAPE MYRTLES

Crape Myrtles shall be maintained with an open, natural crown. The natural branching structure shall be maintained with light pruning only to promote healthy, natural development of form, size, and width.

As trees mature, a clear trunk height of 8.5' minimum shall be maintained.

Canopies shall in no case be allowed to deter safety and visibility in traffic situations.

Light pruning should be performed to remove seed pods as they form to promote re-flowering. The contractor should remove most remaining seed pods in Fall/Winter, where overall height allows this to be done safely. **All Crape Myrtles must be pruned no later than the end of March.** No branches larger than 1/2" in diameter, or more than 24" of the current year's growth shall be removed.

Topping, heading cuts, or trimming back to knobs is not permitted. Proper reduction cuts may be made in some instances with the approval of the landscape manager.

PALMS

Palms shall be pruned once the fronds have dropped to an 8:00 to 4:00 angle. The Contractor shall remove the fronds to a maximum 10:00 to 2:00 angle and all seed and emerging seed pods will be removed. Pruning of palms shall occur a minimum of (3) times per year between the months of March through October.

All Phoenix species will be pruned to a maximum 9:00 to 3:00 angle.

Within all swimming pool areas, palm fronds over the pool deck must be maintained at a height of 10'. Damage or dead palm fronds, seed heads, flower and fruit clusters must be removed upon discovery to reduce the risk of injury to the public and for the overall appearance of the pool facility.

LIGUSTRUM TREES

Ligustrum Trees shall be maintained to have full natural heads, trimming the long runners, but keeping a loose rather than a sheared form.

The tree should be limbed up proportionally with the size of the tree and to allow visibility, where required for safety.

NELLIE STEVENS HOLLY AND RELATED SPECIES

These trees shall be maintained to have thick and dense foliage. They should only be pruned to promote health, and natural development form.

The lower limbs and foliage should never be removed. These trees are intended to obtain their natural shape with the foliage filling the ground.

LIVE OAK AND RELATED SPECIES

Live Oaks and related species are to be maintained to have thick dense foliage. They should only be pruned to promote healthy and natural development form. Pruning shall be kept at a minimum.

As trees mature, only remove necessary lower branches to maintain the natural normal form of the tree, and to allow for necessary maintenance.

As a rule, the tree shall have 2/3 canopy and 1/3 clear trunk.

All limbs that are pruned back to the main trunk or central leader shall be cut at the collar, but not damaging the collar.

MAGNOLIAS

Magnolias shall be maintained to have thick and dense foliage. They should only be pruned to promote health and natural form.

The lower limbs and foliage should never be removed. These trees are intended to obtain their natural shape with the foliage filling the ground.

Pruning shall not be done routinely, but mainly to remove diseased, damaged, or dead wood. To encourage full and dense foliage, prune lightly in the fall or early spring (before the spring flush), by removing 6" to 10" of foliage in appropriate areas and trimming leggy branches, to promote natural shape and form. The central leader shall not be removed.

ALL TREE SPECIES

Pruning shall not be done routinely, but mainly to remove diseased, damaged, or dead wood, or to provide visibility. The contractor shall be responsible for pruning up to the first fifteen (15) feet of trees as needed to maintain a natural and healthy appearance.

All broken limbs or debris resulting from winds, storms, or other causes shall be removed promptly, or immediately if impeding safety.

Pruning cuts shall be clean and smooth with no rough or torn bark or wood remaining.

Maintenance and removal of stakes, guys, tree bracing materials, etc. for trees, palms, and large shrubs is considered routine maintenance. The gridling of trees due to lack of maintenance is not acceptable and will require replacement at the contractor's expense upon discovery.

DISEASE AND PEST CONTROL

All plant material shall be reasonably free of pest infestations, fungus, and disease. Regular inspections during normal maintenance operations shall be undertaken by qualified individuals to identify and respond to such conditions. When five (5%) of any type of plant material shows signs of disease, curative action shall be taken.

Proper fertilization, proper watering, and proper drainage shall be practiced to promote plant vigor and resistance

to pests and diseases.

Chemical application shall be used as appropriate to prevent damage, promote healthy and continued growth, and treat and cure identified problems. All use of chemicals shall comply with all applicable regulatory and safety standards and shall be applied by appropriately trained and licensed pest control specialists. Areas treated shall have signs posted on all areas treated with chemicals to alert residents, especially those with children and pets.

FERTILIZATION OF TREES

Proper fertilization for the varied trees shall be performed three (3) times per year with a complete commercial fertilizer such as 8-2-12, 12-2-14, or 13-3-13 containing a minimum of 25% slow-release Nitrogen, 6% Sulfur, 2% of both Magnesium and Manganese and 3% Iron. The fertilizer shall be broadcast evenly over the entire root zone out to the drip line. Applications shall be at the labeled rate on the bag and applied in March, June, and September.

Palms shall be fertilized three (3) to four (4) times per year with a fertilizer with an analysis of 8-2-12 plus 4% Magnesium (Mg) and 2% Manganese (Mn) and 0.10% to 0.15% Iron (Fe), Zinc (Zn), Boron (B), and Copper (Cu). One hundred percent (100%) of the Nitrogen (N), Potassium (K), and Magnesium (Mg) should be in the controlled release form, while all the micronutrients except Iron (Fe) should be in Sulfate form. Two percent (2%) Iron (Fe) from Iron Sulfate can be substituted for 0.15% Iron (Fe) from chelated forms. (EDTA, DTPA, etc.). This product is to be applied at the rate of 1.5 pounds per 100 square feet of palm canopy or bed area, or 15 pounds per 1000 square feet.

ANNUAL FLOWER MAINTENANCE AND REPLACEMENT FLOWER

BED MAINTENANCE

Annual flower beds shall be maintained in a fashion to allow for a full, colorful appearance always throughout the year. Beds shall be kept free of spent flowers, weeds, and debris.

Shrubs and turf surrounding annual beds must be trimmed to keep them from encroaching on the annual flowers and reducing the bed size. The original size of the beds and the annual flower count as described must remain the same.

Additional soil, soil amendments such as composted manure, organic peat, or a similar mix shall be incorporated and tilled in as part of the annual bed preparation as needed to maintain a rich growing environment for healthy growth and a pleasing appearance.

FERTILIZATION

A standard balanced slow-release fertilizer such as Osmocote, Nutricote, Sierra, or similar shall be incorporated into the bed as a soil amendment before planting each rotation of annuals, perennials, or a mixture of both.

Supplemental fertilization of a complete liquid fertilizer such as 20-20-20 or 10-60-10 at the labeled rate shall be applied to all color beds at least monthly to promote vigorous growth, flowering, and color.

SEASONAL REPLACEMENT

A minimum of four (4) complete changeouts per year in beds that are labeled as annuals on the site plan and unit pricing form or as otherwise designated by the CROA Representative. The annuals shall be four (4) inches or four

and a half (4 ½) inch container size and installed at a maximum of 10" on center.

Specific colors and varieties for each annual rotation must be approved by the CROA Representative before installation. Annual flowers must be in bloom upon installation.

WEED CONTROL

Beds are to be kept free of weeds, landscape debris, and trash. Hand weeding shall be done as necessary.

Application of herbicides shall be done on a curative "as needed" basis. A pre-emerging herbicide may be used. Broadleaf weeds, sedges, and undesirable grasses shall be kept to a minimum.

DISEASE AND PEST CONTROL

All plant material shall be reasonably free of pest infestations, fungus, and disease. Regular inspections during normal maintenance operations shall be undertaken by qualified individuals to identify and respond to such conditions. When five (5%) of any type of plant material shows signs of disease, curative action shall be taken.

Proper fertilization, proper watering, and proper drainage shall be practiced promoting plant vigor and resistance to pests and disease.

Chemical application shall be used as appropriate to prevent damage, promote healthy and continued growth, and treat and cure identified problems.

PESTICIDE USE SPECIFICATIONS

GENERAL

The contractor shall have extensive knowledge and experience developing and implementing Integrated Pest Management Programs (IPM) and shall develop, implement, and adjust an IPM program for all sites included in this contract.

All pesticide applications are to be made by or under the supervision of a person or persons with appropriate valid licenses, permits, or certificates issued under all applicable Federal, State, or local laws or regulations. Said person or company is to be currently registered to conduct a pest control business in the State of Florida and the County of Osceola.

Pesticide applications are to be made in strict compliance with the product label directions, restrictions, and precautions as well as with any other requirements deemed necessary by any county, state, or federal regulatory agency.

Within thirty days of the award of the contract, and/or before the actual start of work, the Contractor shall supply to the CROA Representative a list of all chemicals proposed to be used in the fulfillment of said contract. No "generic" chemicals shall be allowed for substitution purposes unless approved by the CROA Representative.

The most current specimen labels and Safety Data Sheets for all listed chemicals shall be supplied at this time and Copies of both the P.C.A. recommendations and applicable Pest Control Advisor and Qualified Applicator

Licenses or Qualified Applicator Certificates shall be submitted. All above-mentioned items shall be resubmitted in January of each year the Contract is in effect.

CROA shall be notified in writing of any changes or deviations from the above list. Application of deviated materials shall not be made before approval by the CROA Representative.

A five-working day notice in writing shall be given to CROA before any pesticide application. Notice shall include the name of the chemical, area to be treated, rate of chemical, method of application, date and time of day application is to be performed. CROA must give written consent before application of any Category I, or restricted use, pesticide. **Areas treated shall have signs posted on all areas treated with chemicals to alert residents, especially those with children and pets.**

REFUSE CONTROL

Areas within the project limits shall be kept free of litter and refuse (trash, cans, paper, bottles, cigarette butts, etc., and accumulations of leaves, dirt, and branches) always. Policing and litter pickup should occur as often as necessary to ensure a clean, litter-free appearance. **Emptying doggie pots and trash cans in assigned parks are the responsibility of the landscaping company daily Monday- Friday.**

REPLACEMENT OF PLANTS TO MAINTAIN DESIGN INTENT

No changes or additions of plant materials and no changes or additions to the design or layout of the landscaping shall be made without review and approval of CROA.

Any tree, palm, shrub, or groundcover plantings that die, or which are damaged or decline to the extent of affecting the overall appearance of the project, shall be replaced promptly with the same species in a size that reasonably matches the plant it is replacing, to preserve the design intent and appearance of the landscaping. **It is the responsibility of the landscaping company to send estimates along with pictures of plants needing to be replaced immediately.**

Any tree or plant that is abusively pruned in noncompliance with these specifications shall be replaced by the same species in a size that reasonably matches the plant it's replacing.

The Contractor shall be responsible for the full cost of such replacements where required due to incorrect maintenance (abusive pruning, fertilizer burn, etc.) or inadequate maintenance (disease, pests, fungus, irrigation negligence, etc.). The owner shall be responsible for the full cost of such replacements only due to damaging acts by others, acts of God, and/or other circumstances not attributable to actions or inactions of the Contractor.

If the plan included annuals or perennials, replacements shall be made on a seasonal basis, or whenever required, to maintain an acceptable year-round effect. Conversion of bedding plant areas to other landscape plants shall be subject to review and approval by CROA.

PLANT GUARANTEE AND/OR REPLACEMENT POLICY

Existing plants shall be replaced by the Contractor if they die due to the Contractor's negligence. All replacement plants shall be inspected and approved by CROA before installation. All landscape improvements or repairs shall conform to the Celebration Residential Owners Association, Inc. Landscape Specifications and Details.

The Contractor must assume the maintenance responsibility and warrant future landscape improvements, new.

installation and refurbishment of existing landscape as specified within this scope.

The Contractor and the CROA Representative will inspect said landscape before final acceptance by CROA.

The contractor shall submit an inspection report to the CROA Representative within 3 days following the inspection which must list all concerns and recommendations to correct. If the said inspection report is not submitted as required, the Contractor must accept and assume the plant replacement warranty for the remainder of the contract term without consideration of compensation.

Any issues discovered during the inspection process will be corrected based on plant health.

MULCHING/ PINESTRAW

All plant beds and tree rings shall be always maintained with an adequate and neat layer of Cocoa Brown Hardwood Mulch or Pine straw and shall not exceed 3" in depth. Mulching shall occur once per year before November 30th each year.

The contractor will replenish mulch/pine straw where disturbed due to mowing operations such as the edge of landscape beds and tree rings. This shall have been performed at no additional cost to CROA.

Care should be taken during mulching/Pine Straw application to not cover landscape lighting, valves, junction boxes, or other structures and components.

Care shall be taken to avoid piling mulch/ Pine Straw around the plant crowns or trunks.

IRRIGATION SYSTEMS

The Irrigation Contractor / Technician(s) shall be Rain Bird Maxicom Certified and must submit proof of a minimum of 3 years experience with Irrigation installation and maintenance including ESP-LXD Series Two- Wire Decoder Controllers, flow meter, rain gauge, soil moisture sensors, and a good understanding of Evapotranspiration and the ability to utilize such knowledge for the benefit of a healthy landscape.

Irrigation systems and components shall be monitored to ensure that proper coverage is always achieved. Contractors shall provide one dedicated and certified Irrigation Technician for every 300 zones.

IRRIGATION REPAIRS

The Contractor shall be responsible for the repair of all site irrigation beginning with the customer service valve; downstream from the water meter, all pressure main lines, or any equipment in line (flow meters, master valves, etc.), through lateral lines and sprinkler heads; including all irrigation controllers, rain gauges, control, and communication wiring. The contractor shall notify the CROA Representative of any mainline failure within two (2) hours of occurrence. **The CROA Representative shall approve all repairs in advance**. The Contractor shall notify the CROA Representative once repairs are completed and before filling in any repairs to allow for inspection. Once inspected, the CROA Representative will notify the Contractor to backfill the repair. If the open repair presents a hazard to the public the repair shall be backfilled as authorized by the CROA Representative. Photographs of the repairs shall be submitted.

Damage to irrigation systems caused by the Contractor shall be the responsibility of the Contractor to repair within 48 hours of occurrence, self-discovery, or notification by CROA. All replacement parts and materials are to be the same type and model as the original installation unless a substitute is approved by a CROA representative. Failure to do so shall result in a reduction in monthly payments. In addition, a performance deficiency notice shall be issued to the Contractor.

IRRIGATION SCHEDULING AND WATER MANAGEMENT

The contractor shall be responsible for the programming of irrigation controllers that are part of the Rain Bird centralized systems. The Contractor shall be responsible for programming all standalone irrigation controllers.

For changes to irrigation schedules controlled by the Central Irrigation Computers (Maxicom), the Contractor shall submit proposed irrigation schedules or a request to change a schedule to the CROA Representative and the Celebration Community Development District Representative, two (2) days in advance of the needed change. The CROA Representative, using the information provided by the Contractor, shall ensure the schedules are updated by the CCDD by the date requested.

The Contractor shall perform inspections and repairs of all irrigation systems within contracted sites on the following schedule:

Parks, Facilities

- One (1) time per month October - February & two (2) times per month March - September.

Sports Fields

- Two (2) times per month October - February & four (4) times per month March – September.

All inspections shall be included in the calendar work schedule submitted monthly.

The Contractor shall be responsible for programming each non-centralized irrigation controller to run only on assigned watering days as required by the Enterprise Community Development District (ECDD). Failure to do so shall result in a penalty of $100 per occurrence per irrigation controller for those observed to not be programmed as required.

CROA shall have a final determination as to the appropriate programming of the Maxicom Irrigation Controllers. Upon discovery, the Contractor shall immediately report any irrigation system malfunctions, vandalism, or damage to the CROA representative. The Contractor shall be responsible for necessary repairs to irrigation controllers. The CROA Representative shall inspect and confirm any proposed repairs to irrigation controllers before commencement.

The Contractor shall furnish CROA with estimates and approval of repairs over $100.00 per park and an associated inspection report, with location, pricing, and quantities listed, for all irrigation system repairs. Invoice and inspection reports must indicate the exact location of the repairs, the controller, and the valve number to be considered for payment.

IRRIGATION SPECIAL PROVISIONS - WATER MANAGEMENT

The Contractor shall manage irrigation water applied to CROA landscape maintenance areas included in this contract at a rate and quantity that closely matches the actual demands of plant material with little or no runoff. All turf areas shall be irrigated only as required to maintain acceptable growth and appearance without excess usage.

All components of the irrigation system shall be maintained in proper working order, as per manufacturer specifications and this specification. Contractors shall inspect irrigation systems regularly, at a minimum, per the requirements above. In addition, observations shall be made during regular maintenance activities for any apparent concerns, such as broken and/or malfunctioning heads, and shall report observations and areas that need repair to the CROA Representative. All system problems observed shall be repaired immediately upon discovery or within 48 hours if immediate repairs are not practical.

More detailed inspections of system equipment and performance shall be conducted per specifications throughout the year with a site inspection report per zone provided to the CROA Representative every week.

This shall comprise all irrigation components that include but are not limited to backflow prevention devices, main pressure lines, lateral lines, master valves, flow meter valves, sprinkler heads, pressure regulators, controllers, valves, wiring, and rain gauges if installed. The contractor's responsibility for main lines shall consist of continual monitoring and any necessary repairs.

IRRIGATION/OPERATION AND MAINTENANCE

The contractor shall keep all controllers in continuous working order. The contractor shall repair and clean the irrigation controllers as needed to ensure good working performance. The contractor shall keep all controller enclosures in good working order. This includes cleaning door panels, vacuuming interiors, pest prevention-eradication, lubrication of hinges, locks, etc. The contractor is responsible for always securing the controller cabinet door.

The contractor shall adjust all aspects of the irrigation systems to:

- Provide optimum coverage of all landscaped areas.
- Prevent or minimize runoff and/or erosion.
- Prevent or minimize water on roadways, and facilities (tennis, basketball, and handball courts, walkways, trails, fences, private property, or other non-landscaped surfaces).
- Match precipitation rates of all nozzles/heads.
- Prevent, eliminate, and/or limit hazardous conditions.
- Prevent "flood irrigation"; over-irrigating one area to account for coverage deficiency in another area.

All system malfunctions, damage, and obstructions shall be recorded, and timely corrective action taken in addition to specified routine irrigation system testing, all irrigation systems shall be tested and inspected as necessary when damage is suspected, observed, or reported; daily, if needed.

The contractor shall correct deficient irrigation systems and equipment as necessary following notification from the CROA Representative.

The contractor shall notify the CROA Representative immediately any time an irrigation system is shut down for any reason.

The Contractor shall have full responsibility to ensure watering requirements are met within each CROA site. The contractor's forces shall be capable of performing repairs, installations, and modifications of existing irrigation systems to adequately irrigate all landscaped areas.

The Contractor must ensure that sprinkler heads are in good operational order, filters are cleaned regularly, and nozzles are replaced when worn or inadequate coverage occurs. Any minor changes such as riser extensions (vertically or horizontally), sprinkler head exchanges, and nozzle and filter replacements shall be considered as included in the contract price and no additional compensation shall be allowed.

All electrically operated valves shall close completely after the station-watering program. As needed, valves shall be cleaned, repaired, and/or replaced promptly to restore proper operation. As part of the base bid, valve boxes shall be kept clean of sand, debris, and silt to a depth of 2" below the bottom of the valve.

MATERIALS

All replacement materials shall be original types and model materials unless a substitute is approved by the CROA Representative. The contractor shall maintain an adequate inventory of medium to high-usage stock items for the repair of the irrigation systems. The contractor shall implement repairs under all warranties.

The cost of materials invoiced to CROA, if not listed on the unit price sheet, shall be the Contractor's actual cost plus a maximum 15% markup. Labor shall be considered as included in the contract price and no additional compensation shall be allowed. All parts and material invoices must include a copy of the irrigation inspection report specific to each project category location.

DISASTER / EMERGENCY PLAN

When a Hurricane Warning has been issued for the Central Florida area, the Contractor must turn off all irrigation systems immediately as directed by the CROA Representative. This includes weekends and holidays. Once the Hurricane threat has passed, the Contractor shall ensure all irrigation systems are fully operational within 48 hours as directed by the CROA Representative.

In the event of a declared emergency or disaster, the Contractor shall provide debris removal services. Before mobilization for debris removal activities, the Contractor shall provide CROA, in writing, hourly rates for personnel and equipment. Unreasonable rates will be rejected. All overhead costs are included in the hourly rates.

Hourly rates for equipment apply only when equipment is operating and include all associated costs such as operator, fuel, maintenance, and repair.

Personnel and equipment hourly rates include only those hours that the Contractor's personnel are performing the debris removal activities. Stand-by time is not an eligible expense.

Disaster Recovery Assistance Services shall not exceed seventy (70) hours for each declared emergency/disaster without an estimate provided to the CROA representative and approved in writing by CROA.

The contractor shall maintain and supply CROA with all the necessary and adequate documentation on all emergency/disaster-related services to support reimbursement by other local, state, or federal agencies.

CROA reserves the right to immediately terminate all Disaster Recovery Assistance activities under this Agreement

for any reason. CROA will not be held responsible for any loss incurred by the Contractor because CROA elected to terminate these activities under this paragraph.

FORECLOSURE MOWING

The contractor will be required to perform landscape maintenance services for foreclosed properties on an as-needed basis. This will be paid at the Hourly Rate as specified on the bid sheet. The CROA Representative will contact the Contractor with specific addresses. The Contractor will have five (5) business days after notification to complete the work. The grass is to be brought to the height of one-half (1/2) of the existing height not to exceed eight inches (8"). For example: if the grass is eight inches (8") high at the time of notification, the grass shall be cut to four inches (4").

Landscape maintenance service shall include mowing, string trimming, blowing of debris and raking as necessary, and maintaining irrigation.

UNIT PRICE MUST INCLUDE INSTALLATION/LABOR

DESCRIPTION	UNIT PRICE
RAIN BIRD PESB - PRS - D SERIES	
Rain Bird PRS Dial pressure module	$226.41
Rain Bird 1" Valve	$316.75
Rain Bird 1 1/2" Valve	$520.63
Rain Bird 2" Valve	$559.84
Electric, brass 300-BPES - 3"	$1226.07
Diaphragm Assembly PGA 100	$216.09
Diaphragm Assembly PGA 150	$435.86
Diaphragm Assembly PGA 200	$478.15
Diaphragm Assembly BPES 300	$957.85
Electric Solenoid 24 VAC PGA	$224.49
Electric Solenoid 24 VAC 300 BPES	$224.49
RAIN BIRD 1800 PRS SERIES - with NOZZLES	
1806 PRS 6" pop-up	$31.22
1806 SAM PRS 6" pop-up	$38.99
1812 PRS 12" Pop-up body	$36.41
1812 SAM PRS 12" pop-up	$42.70
RAIN BIRD 5000 SERIES ROTOR - with NOZZLES	
6"	$43.80
RAIN BIRD CONTROLLER	

4-Zone Clock	$240.14
6-Zone Clock	$251.78
TURF MAINTENANCE (per Acre)	
Bermuda	$100.00
St. Augustine	$100.00
Zoysia	$100.00
Bahia	$100.00
SOD (Strip Existing & Install per Sq.') – Minimum 500 Sq.'	
St. Augustine	$770.00
Bermuda (Celebration)	$927.50
DESCRIPTION	**UNIT PRICE**
Zoysia (Empire)	$770.00
Bahia	$560.00
SHRUBS (Installed)	
1 Gallon	$14.50
3 Gallon	$38.00
7 Gallon	$82.00
Mulch (Installed per Yard)	
Brown Cocoa Hardwood Mulch	$58.00
Pine Straw (per Bale)	$14.00

REFERENCE EXHIBITS FOR ADDITIONAL SITE-SPECIFIC DETAILS

END OF SCOPE

CELEBRATION, FLORIDA

To Orlando
To Tampa
To Kissimmee
To Airport
Fire Station
Celebration Self Storage
Celebration Health
Hospital, Fitness Center, Professional Offices
Mona Lisa Condo/Hotel
215 Celebration Place Offices
200, 210, 220 Celebration Place Offices
Celebration Place
Celebration Avenue
Tower Place Shops
950 Offices
1120-1144 Offices
1170 1180 Offices
1390 Offices
1530 Medical Center
Celebration Golf
West Village
Georgetown Condos
Kinder Care-Learning Center
Siena Celebration
Celebration School
Community Presbyterian Church
Celebration Lakeside Park
Celebration Village
North Village
South Village
Roseville Corner
Celebration High School
Artisan Club Condos
Artisan Club
East Village
Aquila Reserve
Artisan Park
World Drive
Front Street
Mirasol
Lake Evelyn
Spring Park Springpoint Park
Nash Drive
Celebration Boulevard
Celebration Avenue
Greenbrier Avenue
Water Street
Market Street
Broadway
Oak Street
Magnolia Avenue
Orange Avenue
Lake Avenue
Lake Drive
Lake Street
Lake Shore Drive
Lake Front Circle
Lake Front Drive
Lake Front Court
Lake Front Terrace
Lake Front Place
Lake Front Lane
Lake Front Way
Lake Front Walk
Lake Front Boulevard
Lake Front Avenue
Lake Front Street
Lake Front Road
Lake Front Park
Lake Front Pier
Lake Front Beach
Lake Front Dock
Lake Front Boat Ramp
Lake Front Boat Slip
Lake Front Boat Lift
Lake Front Boat

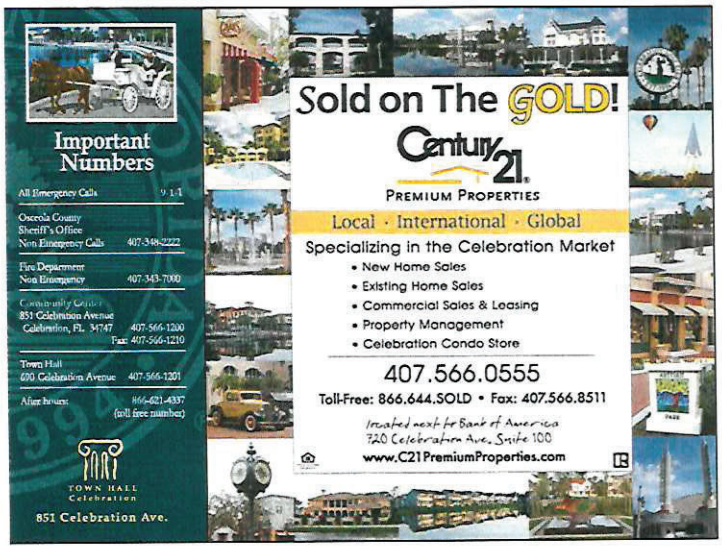

Celebration Architectural Walking Tour

This self-guided tour focuses on the design of Celebration Town Center's architecture. Celebration was conceived as a showcase for the work of some **of America's most important designers.** You will read about facts and concepts behind the architecture during your visit, but the key to this tour is your personal observation of the buildings and the community around them.

Follow along using the map below. Buildings are numbered to help guide you. Along the way, take detours. There are places to stop and rest in the Town **Center's uniquely charming restaurants and shops.**

The tour starts at the Preview Center ❶ on the corner of Celebration Avenue and Market Street. In this center area of town you will be facing the Preview Center and Market Square Park, with its beautiful fountain, will be behind you. **You're now ready to begin.**

The Preview Center is the last work done by the great American architect Charles Moore, completed posthumously by his partner Arthur Andersen. With its brick façade and metal roof, it recalls the great working buildings of American small towns just after the turn of the century. Moore and Andersen thought of it as a hard-working building; they termed it the **"architectural** equivalent to a pair of loose-fitting **Levi's 501's."**

The star-wrapped tower is the tallest structure in town. Typically such **"towers"** buildings were symbols and showcases of new Florida developments just as this one. They were buildings intended to be seen from a distance, beckoning newcomers to the town.

The metal star that encircles the tower was designed to make **"an ever-changing shadow pattern across the face of the building,** animated with the natural light of the sun." **The trellis along the** ground level is designed to offer shade to the passing pedestrian.

Follow Celebration Avenue to Campus Street. At the corner of Campus Street **you will see Founder's Park** ❷ and, behind it, the Celebration K-8 School.

Farther down Celebration Avenue you can see the corner of the Stetson University building. ❸

Turn left onto Campus Street and follow it until it curves to the left, which is Bloom Street. Here **you'll** find the Celebration Hotel ❹. Noted architect Graham Gund designed this three-story, 115-room, four-star hotel, **featuring the natural simplicity of a 1920's Florida wood frame design. The** signature tin roof and lighthouse tower help attract guests to its entrance. The hotel is situated on the lake, offering guests a prime location for a weekend getaway or for celebrating a special occa❺n.

As you approach the lakefront, continue on Bloom Street until it meets Front Street. By taking a right on Front Street ❻ you will continue past more shops and restaurants and pass Market Street, which you will see at the end of your tour. The focal point for this side of the lake is the cinema. The Celebration movie theater was designed by Cesar Pelli as an ode to the time when going to the movies was an **event, not just a routine trip to the local mall's multiplex, and the movie houses were glamorous spots known as "picture palaces."**

The twin towers serve as **"signposts" as** well as beacons that call you from a distance. The design emphasizes the experience of walking to the theater. An outdoor courtyard provides a place to wait before the movie begins, and looking back out, the towers frame a view of the lake and the lighthouse ❼ as a fountain across the street.

The Lakeside Promenade Fountain ❽ has an interactive design created by the landscape architecture firm, EDAW. It has three rings of water jets that are programmed to spurt in what appears to be a random fashion and has a compass-like pattern set in granite and pre-cast concrete. **The fountain's design** was inspired by a similar work in Aspen, Colorado. Adults enjoying sitting and watching it. Children love playing in the dancing columns of water.

Continue walking toward the Columbia Restaurant and turn left on to Sycamore Street. Walk one block to the next street corner, which is Celebration Avenue, and stop. You are now at the home of SunTrust Bank❾. **The bank's design,** by Robert Venturi and Denise Scott-Brown, was inspired by a neoclassical style typical of turn-of-the-century banks. The final work however is an abstract of a pure neoclassical style; stripped down and flattened out, as much a building of today as yesterday. Venturi and Scott-Brown **wanted to create a "civic presence and scale" in what is actually a small building.**

The building is stucco textured to look like sandstone. It is proportioned so to seem more imposing at street level – the architects intended to have **"more pomp and circumstance" at its base** – growing lonsbler along the upper part of the façade. The colors are lighthearted and even a bit mischievous with sprightly pastel tints set against a pale gray background. The central banking space is sky-lit and the interior carries out the same color scheme, gray, with pastel trim capping the columns.

Continue down Celebration Avenue until you reach Market Street again. Now turn your attention to the Town ❿ . Town Hall is the work of Philip Johnson, who turned 20 the year it was **completed. It is red brick and is surrounded by a "forest" of white** columns.

The metal roof slopes down to create covered **"porches"** where residents and visitors alike can congregate and be protected **from the sun or rain. It's built to stand out as the town's most** important civic building. Town Hall serves as a meeting hall and business office.

To the right of Town Hall, **you'll** see the **town's** smallest building, ⓫ the Post Office. Princeton, N.J. architect, Michael Graves designed the wood board-and-batten **building with a painted metal roof. It features a rotunda in the building's** entrance and an open-air loggia for the **town's mailboxes. The interior of the rotunda has an exposed "wood joist" ceiling.**

The precedent for this post office can be found in nearby St. Petersburg, Florida, **where the "open-air post office" is an important historic landmark, dating back to 1917. Historically, post offices were among the most beloved of a town's buildings and they were public gathering places. Celebration's post office is** designed just for that. It is a place where re⓬nts can congregate as they stop to pick up or send out their mail.

Take your time to walk down Market Street ⓭. Market Street is designed **as Celebration's primary shopping promenade as the town's main street. It's called Market Street because there already was a Main Street in Osceola** County and street names cannot be used twice. From modern restaurants **to a Sunday country Farmer's Market, Market Street has much to offer** visitors and residents alike.

While there is much more to see and explore in Celebration, this walking tour has given you a taste of what daily life is like in this town. Since the rest of it is a little more spread out, explore by car, bike, or segway and see the beautiful architecture of the houses and recreational areas that make up this beautiful part of Florida.

Celebration Residential Owners Association, Inc. (CROA)

Pricing Worksheet "Exhibit B"

UNIT PRICE MUST INCLUDE INSTALLATION/LABOR

DESCRIPTION	UNIT PRICE
RAIN BIRD PESB - PRS - D SERIES	
Rain Bird PRS Dial pressure module	
Rain Bird 1" Valve	
Rain Bird 1 1/2" Valve	
Rain Bird 2" Valve	
Electric, brass 300-BPES - 3"	
Diaphragm Assembly PGA 100	
Diaphragm Assembly PGA 150	
Diaphragm Assembly PGA 200	
Diaphragm Assembly BPES 300	
Electric Solenoid 24 VAC PGA	
Electric Solenoid 24 VAC 300 BPES	
RAIN BIRD 1800 PRS SERIES - with NOZZLES	
1806 PRS 6" pop-up	
1806 SAM PRS 6" pop-up	
1812 PRS 12" Pop-up body	
1812 SAM PRS 12" pop-up	
RAIN BIRD 5000 SERIES ROTOR - with NOZZLES	
6"	
RAIN BIRD CONTROLLER	
4-Zone Clock	
6-Zone Clock	
TURF MAINTENANCE (per Acre)	
Bermuda	
St. Augustine	
Zoysia	
Bahia	

	UNIT PRICE
SOD (Strip Existing & Install per Sq.') – Minimum 500 Sq.'	
Bermuda (Celebration)	
DESCRIPTION	**UNIT PRICE**
Zoysia (Empire)	
Bahia	
SHRUBS (Installed)	
1 Gallon	
3 Gallon	
7 Gallon	
Mulch (Installed per Yard)	
Brown Cocoa Hardwood Mulch	
Pine Straw (per Bale)	

Celebration Residential Owners Association, Inc. (CROA)

Pricing Worksheet "Exhibit B"

UNIT PRICE MUST INCLUDE INSTALLATION/LABOR

DESCRIPTION	UNIT PRICE
RAIN BIRD PESB - PRS - D SERIES	
Rain Bird PRS Dial pressure module	
Rain Bird 1" Valve	
Rain Bird 1 1/2" Valve	
Rain Bird 2" Valve	
Electric, brass 300-BPES - 3"	
Diaphragm Assembly PGA 100	
Diaphragm Assembly PGA 150	
Diaphragm Assembly PGA 200	
Diaphragm Assembly BPES 300	
Electric Solenoid 24 VAC PGA	
Electric Solenoid 24 VAC 300 BPES	
RAIN BIRD 1800 PRS SERIES - with NOZZLES	
1806 PRS 6" pop-up	
1806 SAM PRS 6" pop-up	
1812 PRS 12" Pop-up body	
1812 SAM PRS 12" pop-up	
RAIN BIRD 5000 SERIES ROTOR - with NOZZLES	
6"	
RAIN BIRD CONTROLLER	
4-Zone Clock	
6-Zone Clock	
TURF MAINTENANCE (per Acre)	
Bermuda	
St. Augustine	
Zoysia	
Bahia	

	UNIT PRICE
Mowing of LOT D	
Additional Rolling of Turf	
Red Ant Treatments	
Sanitizing and Cleaning of Synthetic Turf	
Service of infill of the rubber and/or cool play	
SOD (Strip Existing & Install per Sq.') – Minimum 500 Sq.'	
St. Augustine	
Bermuda (Celebration)	
DESCRIPTION	**UNIT PRICE**
Zoysia (Empire)	
Bahia	
SHRUBS (Installed)	
1 Gallon	
3 Gallon	
7 Gallon	
Mulch (Installed per Yard)	
Brown Cocoa Hardwood Mulch	
Pine Straw (per Bale)	

Agreement No: XXXXXXXX
Project: **Service Area XXXXXX**
Scope of Services: Parks and
Service Areas Maintenance

Reviewed by:

SERVICES AGREEMENT

THIS AGREEMENT is made effective as of the ____ day of **January 1st, 2024,** by and between Celebration Residential Owner's Association, Inc. (herein referred to as the "Owner"), whose mailing address is 851 Celebration Avenue, Celebration, FL 34747, Attention: **President,** and **Vendor** (herein referred to as the "Contractor"), whose mailing address is **XXXXXXXXXXX.**

WITNESSETH

WHEREAS Owner desires to employ the services of Contractor for an initial 42-month period with two optional 12-month extensions, with the initial 42-month period beginning **MAY 1, 2024,** and ending **December 31st, 2027,** to perform the hereinafter described Services, and Contractor desires to be so employed. Costs shall remain fixed and firm for the initial 42 months of the Agreement, after which they shall be adjusted according to Exhibit B, the Rate Schedule, if the Agreement is extended for 12-month increments by mutual agreement of the parties, or as otherwise modified as outlined in this Agreement.

NOW THEREFORE, in consideration of the premises and the mutual covenants and obligations contained in this Agreement, the parties agree as follows:

1. DEFINITIONS.

a. Agreement. The Agreement consists of this Services Agreement, the Scope of Services, the Rate Schedule, the form of Changed Service Authorization, the form of General Release, and all other documents enumerated on the List of Exhibits set forth below. The Agreement represents the entire and integrated Agreement between the parties hereto and supersedes all prior negotiations, representations, or agreements, either written or oral. The Agreement may be amended or modified only as set forth below in Article 6.

b. Services. The term "Services" as used in this Agreement shall be construed to include all Services outlined in Exhibit A, all obligations of Contractor under this Agreement, and where any Changed Service Authorizations have been issued under Article 6 of this Agreement, the changed Services set fo1ih therein.

2. SCOPE OF SERVICES.

a. A description of the nature, scope, and schedule of Services to be performed by Contractor under this Agreement by the following List of Exhibits:

i. Exhibit A, Scope of Services 29 Pages.

Ti. Exhibit B, Rate Schedule, 3 pages.

iii. Exhibit C, Changed Service Authorization form, 1 page.

Iv. Exhibit D, General Release form, 1 page.

3. BASIS FOR COMPENSATION AND PAYMENTS.

Fixed Fee & Reimbursable

a. Provided that the Contractor shall strictly perform all of its obligations under the Agreement, and subject only to additions and deductions by Changed Service Authorization as outlined in Article 6, the Owner shall pay to Contractor for its Services as outlined in Article 2, a Fixed Fee in the amount of $ annually plus all Reimbursable Expenses as defined below.

b. The Contractor shall on the twenty-fifth (25th) day of each calendar month deliver to the Owner an Application for Payment in such form and with such detail as the Owner requires.

c. Based on the Contractor's Application for Payment, and the approval of the Application for Payment issued by the Owner, the Owner shall make equal monthly payments to the Contractor on account of the Fixed Fee. Such monthly payments shall be made on or before the fifteenth (15th) day of each calendar month or the twentieth (20th) day after receipt by the Owner of the Contractor's Application for Payment and of such documentation to verify the amount owed as the Owner may require, whichever is later; provided, however, that the Owner shall have no obligation to make payment as aforesaid if it has withheld approval of any Application for Payment.

d. Reimbursable Expenses shall include only the following actual and necessary costs and expenses reasonably and properly incurred by Contractor in connection with the Services rendered under this Agreement:

e. Contractor shall be compensated for any Services beyond those outlined in Article 2, in such an amount as the patties shall mutually agree in advance, such amount to be added to the Fixed Fee and invoiced and paid by the terms of Paragraphs b and c above; provided, however, that Contractor shall not be entitled to compensation for such Services unless Contractor has obtained the prior written authorization of Owner to perform the same by the provisions of A1ticle 6 of this Agreement.

f. The owner retains the right to reduce any portion of the Contractor's Scope of Services as outlined in Article 2, or any Changed Service Authorization, by the provisions of A1ticle 6 of this Agreement. In such event, the Owner shall be entitled to a proportionate reduction to the Fixed Fee.

g All invoices should reference the contract number and be returned to the following address:

CROA
P.O. Box 803555
Dallas TX, 75380.

4. REPRESENTATIONS, WARRANTIES, AND COVENANTS. The contractor hereby represents to the Owner that: (a) it has the experience and skill to perf01m the Services as outlined in this Agreement; (b) that it shall comply with all applicable federal, state, and local laws, rules, codes, and orders of any public, quasi-public or other government authority; (c) it is duly licensed to observe and perform the terms, covenants, conditions and other provisions on its part to be observed or performed under this Agreement; (d) it has by careful examination satisfied itself as to (i) the nature, location, and character of the general area in which the Services are to be performed including, without limitation, the surface conditions of the land and all structures and obstructions thereon, both natural and manmade, the surface water conditions of the general area and, to the extent pertinent, all other conditions; and (ii) all other matters or things which could in any manner affect the performance of the Services.

5. INSURANCE; INDEMNIFICATION.

a. Contractor shall, throughout the performance of its Services under this Agreement, maintain:

(i) Occurrence basis comprehensive general liability insurance (including broad form contractual coverage) and automobile liability insurance, with minimum limits of $1,000,000, respectively, combined single limit per occurrence, protecting it and the Owner from claims for bodily injury (including death) and property damage which may arise from or in connection with the performance of Contractor's Services under this Agreement or from or out of any act or omission of Contractor, its officers, directors, agents, and employees; and

(ii) Workers' compensation insurance as required by applicable law (or employer's liability insurance concerning any employee not covered by workers' compensation) with minimum limits of One Hundred Thousand Dollars ($100,000) per occurrence.

b. All such insurance required in Paragraph a. shall be in companies and on forms acceptable to the Owner and shall provide that the coverage thereunder may not be reduced or canceled unless thirty. (30) days prior written notice thereof is furnished to the Owner. Certificates of insurance (and copies of all policies, if required by the Owner) shall be furnished to the Owner. In the event of any cancellation or reduction of coverage, the Contractor shall obtain substitute coverage as required under this Agreement, without any lapse of coverage to the Owner whatsoever.

6. MODIFICATIONS, ADDITIONS, OR DELETIONS TO THE SERVICES.

a. A Changed Service Authorization shall be in writing by the Owner, in the form and manner attached to this Agreement as Exhibit C, which shall consist of additions, deletions, or other modifications to the Agreement.

b. The Owner may, from time to time, without affecting the validity of the Agreement, or any theme or condition thereof, issue Changed Service Authorization which may identify additional or revised Scope of Services, or other written instructions and orders, which shall be governed by the provisions of the Agreement. The Contractor shall comply with all such orders and instructions issued by the Owner. Upon receipt of any such Changed Service Authorization, the Contractor shall promptly proceed with the Changed Service Authorization, and the resultant decrease or increase in the amount to be paid the Contractor, if any, shall be governed by the provisions of Article 3 in this Agreement.

7. PROTECTION OF PERSONS AND PROPERTY.

a. The Contractor shall be responsible for initiating, maintaining, and supervising safety precautions and programs in connection with the Services, and shall provide all protection to prevent injury to all persons involved in any way in the Services and all other persons, including, without limitation, the employees, agents, guests, visitors, invitees, and licensees of the Owner who may visit or be affected thereby.

b. All Services, whether performed by the Contractor, its Subcontractors, or anyone directly or indirectly employed by any of them, and all applicable equipment, machinery, materials, tools, and like items used in the Services, shall be in compliance with, and conform to (a) all applicable laws, ordinances, rules, regulations and orders of any public, quasi-public or other governmental authority; and (b) all codes, rules, regulations and requirements of the Owner and its insurance carriers relating thereto. In the event of conflicting requirements, the more stringent shall govern.

c. The Contractor shall always keep the general area in which the Services are to be performed clean and free from accumulation of waste materials or rubbish (including, without limitation, hazardous waste), caused by the performance of the Services, and shall continuously throughout performance of the Services remove and dispose of all such materials. The Owner may require the Contractor to comply with such standards, means, and methods of cleanup, removal or disposal as the Owner may make known to the Contractor. In the event the Contractor fails to keep the general area in which the Services are to be performed clean and free from such waste or rubbish, or to comply with such standards, means, and methods, the Owner may take such action and offset.

any costs or expenses of whatever nature paid or incurred by the Owner in unde11aking such action against any sums then or thereafter due to the Contractor.

8. BOOKS AND RECORDS. The contractor shall maintain comprehensive books and records relating to any Services performed under this Agreement, which shall be retained by the Contractor for a period of at least four.
(4) years from and after the completion of such Services. The owner, or its authorized representatives, shall have the right to audit such books and records at all reasonable times upon prior notice to the Contractor. The provisions of this paragraph shall survive the expiration or early termination of this Agreement.

9. ASSIGNMENT. This Agreement is for the personal services of Contractor and may not be assigned by Contractor in any fashion, whether by operation of law or by conveyance of any type including, without limitation, transfer of stock in Contractor, without the prior written consent of Owner, which consent Owner may withhold in its sole discretion. Owner retains the right to assign all or any portion of this Agreement at any time. Upon such assignment, and provided the Assignee shall, in writing, assume Owner's obligations under this Agreement, the Owner shall be automatically released and discharged from any of its obligations under this Agreement, and the Contractor shall thenceforth look solely to the Assignee for the performance of Owner's obligations under this Agreement.

10. SUSPENSION OR TERMINATION. Anything in this Agreement, to the contrary notwithstanding, the Owner shall, in its sole discretion and with or without cause, have the right to suspend or terminate this Agreement upon seven (7) days prior written notice to the Contractor. In the event of termination, the Owner's sole obligation and liability to the Contractor, if any, shall be to pay to the Contractor that portion of the fee earned by it, plus any earned amounts for extra Services performed under Articles 3 and 6, through the date of termination, plus any Reimbursable Expenses incurred (to the extent these are expressly allowed under Article 3).

11. SUBCONTRACTORS. If the Contractor desires to employ Subcontractors in connection with the performance of its Services under this Agreement:

a. Nothing contained in the Agreement shall create any contractual relationship between the Owner and any Subcontractor. However, it is acknowledged that the Owner is an intended third-party beneficiary of the obligations of the Subcontractors related to the Services.

b. Contractor shall coordinate the services of any Subcontractors and remain fully responsible under the terms of this Agreement; Contractor shall be and remain responsible for the quality, timeliness, and coordination of all Services furnished by the Contractor or its Subcontractors.

c. All subcontracts shall be written. Each subcontract shall contain a reference to this Agreement and shall incorporate the terms and conditions of this Agreement to the full extent applicable to the portion of the Services covered thereby. Each Subcontractor must agree, for the benefit of the Owner, to be bound by, such terms and conditions to the full extent applicable to its portion of the Services.

12. NOTICE.

a. Notices required or permitted to be given under this Agreement shall be in writing, may be delivered personally or by mail, telex, e-mail, cable, or courier service, and shall be deemed given when received by the addressee. Notices shall be addressed as follows:

Owner: CROA
851 Celebration Avenue
Celebration, FL 34747

If to Contractor: Contractor ABC
PO Box 123

or to such other address as either party may direct by notice given to the other as hereinabove provided.

b. Notwithstanding the foregoing, any notice sent to the last designated address of the party to whom a notice may be or is required to be delivered under this Agreement shall not be deemed ineffective if actual delivery cannot be made due to a change of address of the party to whom the notice is directed or the failure or refusal of such party to accept delivery of the notice.

13. LEGAL PROCEEDINGS.

a. The Agreement shall be construed and interpreted by the laws of the State of Florida and shall constitute the entire and sole understanding of the parties hereto notwithstanding any prior or written statements, instructions, agreements, representations, or other communications.

b. Any legal proceeding of any nature brought by either party against the other to enforce any right or obligation under this Agreement, or arising out of any matter about this Agreement or the Services to be performed hereunder, shall be submitted for trial, without a jury, before the Circuit Court of the Ninth Judicial Circuit in and for Orange/Osceola County, Florida; or, if the Circuit Court does not have jurisdiction, then before the United States District Comi for the Middle District of Florida (Orlando Division); or if neither of such courts shall have jurisdiction, then before any other court sitting in Osceola County, Florida, having subject matter jurisdiction. The premises consent and submit to the jurisdiction of any such court and agree to accept service of process outside the State of Florida in any matter to be submitted to any such court pursuant hereto, and expressly waive all rights to trial by jury regarding any such matter.

c. If any provision of the Agreement is judicially construed to be invalid by a court of competent jurisdiction, such provision shall then be construed in a manner allowing its validity or, if this leads to an impracticable result, shall be stricken but, in either event, all other provisions of the Agreement shall remain in full force and effect.

14. MISCELLANEOUS PROVISIONS.

a. Any failure by the Owner to require strict compliance with any provision of this Agreement shall not be construed as a waiver of such provision, and the Owner may subsequently require strict compliance at any time, notwithstanding any prior failure to do so.

b. The acceptance of final payment under this Agreement, or the acceptance of final payment upon early termination hereof, shall constitute a complete release of Owner by Contractor f'om any claims, demands, and causes of action whatsoever which Contractor may have against Owner in any way related to the subject matter of this Agreement and Contractor shall as a condition precedent to receipt of final payment f'om Owner, submit to the Owner a fully and properly executed General Release, in the form attached to this Agreement. Neither the Owner's review, approval, or acceptance of, nor payment for, any of the Services required under this Agreement shall be construed to operate as a waiver of any rights under this Agreement or any cause of action arising out of the performance of this Agreement, and Contractor shall be and remain liable to Owner by law for all damages to Owner caused by the Contractor's performance of any of the Services furnished according to this Agreement.

c. It is understood and agreed that the Contractor is acting as an independent contractor in the performance of its Services hereunder, and nothing contained in this Agreement shall be deemed to create an agency relationship between the Owner and Contractor.

d. The rights and remedies of the Owner provided for under this Agreement are cumulative and are in addition to any other rights and remedies provided by law.

IN WITNESS WHEREOF, the parties have caused this Agreement to be duly executed effective as of the day and year first above written.

Exhibit A
Scope of Services
Contract No.: _____

See the attached the 29-page Landscape Maintenance Proposal and Authorization for services to the service area - Example Service area.

End of Exhibit A

Exhibit B
Rate Schedule
Contract No.:

The total sum of $ 1,198,128.00 shall be paid to Contractor upon satisfactory completion, approval by Owner, and receipt of detailed invoice (as bid and attached), invoiced to Owner; in increments of $ 99,844 monthly.

End ofExhibit B

Exhibit C
Changed Service Authorization
CQntract_NQ._:

Contract Number: Date:

Service Authorization No.

To:

Under the Services Agreement dated, 4/4/24 the Contractor agrees to perform the Changed Services described below for a fee to be computed in the manner set out below or by Article 3 of the Agreement.

Description of Changed Services:

Adjustment to Fee:

Reimbursable:

All claims for Reimbursable Expenses (to the extent those are expressly allowed under Article 3 of our Agreement) must be approved in advance by the Owner.

The total amount of this Changed Service Authorization shall be complete consideration to the Contractor for performance of the Services set forth above and the Contractor hereby waives any claims arising out of or related to the Services covered by this Changed Service Authorization.

The contractor shall commence the aforesaid Changed Services upon the execution hereof and shall perform the same by the terms and conditions of the Agreement which, except to the extent expressly altered or changed in this Changed Service Authorization, remain in full force and effect.

This Changed Service Authorization represents the entire and integrated agreement between the parties, and supersedes all prior negotiations and qualifications, for this change in scope; but this Changed Service Authorization and the Services contemplated herein is, except as otherwise specifically provided herein, subject to all the terms and conditions of the Agreement including without limitation, those concerning payment.

CONTRACTOR

Authorized Signature:

Print Name: Nikki Pagnot

Title: CFO

Date: 4/4/24

OWNER

Authorized Signature:

Print Name: Stephen McDowell

Title: Owner | CEO.

Date: 4/4/24

Exhibit D
General Release
Contract No.:

FOR AND IN CONSIDERATION OF THE SUM of $_ as FINAL PAYMENT, the receipt and adequacy of which is hereby acknowledged, _____, the undersigned, hereby fully and forever releases, acquits and discharges the Owner, the Owner's Representative, and their agents, employees, consultants, architects, engineers, officers, directors, successors, assigns, separate contractors and their subcontractors and sub-subcontractors, all of whom are hereinafter referred to as "Releasees", from any and all claims, actions, causes of action, liens, rights to claim a lien, suites, expenses, losses and damages (including, without limitation, any and all expenses, losses and damages, for or arising out of direct costs, indirect costs, expenses, overhead, profit, labor, labor impacts, materials, supplies, equipment, changes, cardinal changes, cumulative impacts, disruptions, hindrances, interferences, delays, acceleration, inefficiencies, lost productivity, taxes, insurance, bonds, deliveries, supervision, or any other costs, expenses, losses or damages of any nature whatsoever), judgments, and rights whatsoever, in law or in equity, known or unknown, now existing through the date of execution of this General Release or which may hereafter accrue (hereinafter referred to collectively as "Claims") in favor of the undersigned for, by reason of, or arising out of or in connection with any matter, transaction, contract, agreement, occurrence, act, event, cause or thing whatsoever from the beginning of time to the date of this General Release arising out of or in connection with (i) the above-identified Contract or (ii) all work, labor, services, materials, equipment and other items furnished, performed or provided pursuant to said Contract or otherwise for the above- identified Project.

The undersigned covenants that except for actions and suits based upon breaches of the terms of this Release, it shall not commence or prosecute any action or suit in law or in equity, against the Releasees, or any of them, on account of any action or cause of action which now exists or which may hereafter accrue in its favor arising out of or in connection with (i) the above-identified Contract or (ii) all work, labor, services, materials, equipment and other items furnished, performed or provided under said Contract or otherwise for the above-identified Project.

In addition to any other liability that shall accrue upon the breach of the covenants contained herein, the undersigned shall be liable to pay all reasonable attorneys' fees and costs incurred by the Releasees, or any of them, in the defense of any such action or suit brought in violation of the covenant contained in Paragraph 2 hereof.

WITNESS our hands this of: 20_.

WITNESSES:

1) _____

2) _____

STATE OF FL

COUNTY OF PASCO

Florida commercial Care
(Contractor)

_____
Signature

Stephen McDaxell
Print Name/Title

The foregoing instrument was acknowledged before me Nikki Pagnott by Florida Commercial Care of _____ a S corporation, on behalf of the corporation. He/she is personally known to me or has produced as identification and did (did not) take an oath.

VANESSA M. TREVIÑO
Notary Public
State of Florida
Comm# HH306111
Expires 8/29/2026

_____
Notary Public - State of Florida

Celebration Residential Owners Association, Inc. (CROA)

PROJECT CATEGORY - PARKS & FACILITIES

ADDITIONAL REQUIREMENTS

In addition to the specifications described within the Scope of Work, the following site-specific specifications are required.

The contractor shall provide a designated crew and appropriately sized equipment for landscape maintenance and specialty maintenance of all CROA Parks & Facilities. Attention to detail is imperative.

The work consists of turf maintenance, weeding and edging of ground cover, preventing, and controlling weeds in turf, planters, and hardscape, trimming of shrubs, application of pesticides, hardscape areas, litter collection and disposal, and other activities normally associated with full-service maintenance of parks & recreational facilities.

The Contractor will be responsible for all turf, landscape & irrigation located within all fence pool areas.

Property boundary lines include easements adjacent to each park and facility (typically from the back of the curb or pavement edge to the sidewalk) and shall be maintained as part of this scope.

The following are descriptions and locations of each Park & Facility to be included within the Scope of Work bid.

PARKS

Celebration residents enjoy many neighborhood parks that offer sidewalks, picnic tables, benches, chairs, shade, unique art & fountains, trash, and pet receptacles, drinking fountains, playgrounds, sports courts, pavilions, pergolas & arbors.

The following is a list of parks per neighborhood/village. Community

Parks:
Lakeside
The Commons
North Village Pavilion
Meeting Room
Spring Park
East Crescent

Neighborhood Parks:

Celebration Village
Founders
Savannah Square

South Village
Central Bark

Roseville Corner
Nash

East Village
Aquila Loop
Greenlawn
The Greens Rec Area
Blue Sage

Artisan Park
Craftsman
Bocci
Amphitheater

Island Village
Homestead
Mews
Gathering
Green
Tidepool Mews
Beach Ridge
Mews
Squiggles Park
Olmstead
Mews

Buildings With Grounds:
Heritage Hall
Roseville Corner

Unleashed Dog Park

REFUSE REMOVAL

TRASH RECEPTACLES & DOGI-POT WASTE STATIONS

The contractor shall empty and install new disposable liners each day of service. Partially filled receptacles must be emptied each service day due to wildlife activity.

Standing water shall be removed from the receptacles.

The contractor shall notify the CROA Representative when additional receptacles are needed or if trash receptacles need painting or replacement due to damage.

The contractor is responsible for the proper placement of trash receptacle lids, locking Dogi-Pot lids, and replenishing dog waste pick-up bags and liners.

Dogi-Pot Waste Stations installed throughout CROA parks and facilities.

SUPPLIES / MATERIALS

The contractor shall supply liners for all trash receptacles using a heavy mill black liner/bag.

CROA shall supply all liners and waste pick-up bags for the Dogi-Pot Waste Stations.

The contractor shall maintain an inventory list indicating the number of liners and bags used each month and the number of supplies in stock which shall be listed in the report submitted to the CROA Representative monthly.

FREQUENCY OF SERVICE – Monday – Friday at the following Facility locations: All Parks notated under the list of parks on page 1.

FACILITIES

Lakeside Park & Pool - 631 Sycamore St

North Village Commons Park & Pool - 215-A Celebration Blvd

Celebration Unleashed Dog Park - 309 Campus St

Spring Park & Pool - 951 Spring Park Street

East Lawn Park & Pool - 820 Oak Shadows Rd

SPORTS COURT'S LOCATIONS

Lakeside Park – 5 Tennis Courts, 1 Basketball Court, 1 Pétanque Court

North Village Commons – 2 Sand Volleyball Courts

Artisan Park – 1 Bocce Court

Sand must be groomed a minimum of (4) four times per week and will include the removal of wildlife fecal matter discovered during the grooming process.

Rake sand areas to a depth of 1.5" – 2.0" to expose any debris for removal.

Grooming shall consist of hand raking the sand to a level surface leaving all edges with a smooth transition between the surrounding surfaces.

The contractor shall monitor the depth and condition of the sand to ensure a minimum of 8" clean white sand is maintained as the Playground Safety Surface. The contractor shall include the depth and condition of the sand within the monthly report submitted to the CROA Representative.

SYNTHETIC TURF PLAYGROUND SURFACE

The contractor shall clean all debris from the Synthetic Turf Playground Safety Surface using a blower or vacuum and shall check for and remove all safety surface hazards.

FREQUENCY OF SERVICE - Monday through Friday at the following playground locations:

North Village Commons, Spring Park, East Lawn Park & Long Meadow Park

2024 CROA PARKS PROJECT LIST EXHIBIT C

End of Scope

PARKS & FACILITIES

Form **W-9**
(Rev. October 2018)
Department of the Treasury
Internal Revenue Service

Request for Taxpayer Identification Number and Certification

▶ Go to *www.irs.gov/FormW9* for instructions and the latest information.

Give Form to the requester. Do not send to the IRS.

Print or type. See Specific Instructions on page 3.

1 Name (as shown on your income tax return). Name is required on this line; do not leave this line blank.
Florida Commercial Care, Inc.

2 Business name/disregarded entity name, if different from above

3 Check appropriate box for federal tax classification of the person whose name is entered on line 1. Check only **one** of the following seven boxes.

☐ Individual/sole proprietor or single-member LLC ☐ C Corporation ☒ S Corporation ☐ Partnership ☐ Trust/estate

☐ Limited liability company. Enter the tax classification (C=C corporation, S=S corporation, P=Partnership) ▶ S

Note: Check the appropriate box in the line above for the tax classification of the single-member owner. Do not check LLC if the LLC is classified as a single-member LLC that is disregarded from the owner unless the owner of the LLC is another LLC that is **not** disregarded from the owner for U.S. federal tax purposes. Otherwise, a single-member LLC that is disregarded from the owner should check the appropriate box for the tax classification of its owner.

☐ Other (see instructions) ▶

4 Exemptions (codes apply only to certain entities, not individuals; see instructions on page 3):

Exempt payee code (if any) _____

Exemption from FATCA reporting code (if any) _____

(Applies to accounts maintained outside the U.S.)

5 Address (number, street, and apt. or suite no.) See instructions.
1158 US HWY ALT 19

Requester's name and address (optional)

6 City, state, and ZIP code
Holiday, FL 34691

7 List account number(s) here (optional)

Part I Taxpayer Identification Number (TIN)

Enter your TIN in the appropriate box. The TIN provided must match the name given on line 1 to avoid backup withholding. For individuals, this is generally your social security number (SSN). However, for a resident alien, sole proprietor, or disregarded entity, see the instructions for Part I, later. For other entities, it is your employer identification number (EIN). If you do not have a number, see *How to get a TIN,* later.

Note: If the account is in more than one name, see the instructions for line 1. Also see *What Name and Number To Give the Requester* for guidelines on whose number to enter.

Social security number
			–		–				

or

Employer identification number
		–							
5	9	–	3	7	1	0	7	9	0

Part II Certification

Under penalties of perjury, I certify that:

1. The number shown on this form is my correct taxpayer identification number (or I am waiting for a number to be issued to me); and
2. I am not subject to backup withholding because: (a) I am exempt from backup withholding, or (b) I have not been notified by the Internal Revenue Service (IRS) that I am subject to backup withholding as a result of a failure to report all interest or dividends, or (c) the IRS has notified me that I am no longer subject to backup withholding; and
3. I am a U.S. citizen or other U.S. person (defined below); and
4. The FATCA code(s) entered on this form (if any) indicating that I am exempt from FATCA reporting is correct.

Certification instructions. You must cross out item 2 above if you have been notified by the IRS that you are currently subject to backup withholding because you have failed to report all interest and dividends on your tax return. For real estate transactions, item 2 does not apply. For mortgage interest paid, acquisition or abandonment of secured property, cancellation of debt, contributions to an individual retirement arrangement (IRA), and generally, payments other than interest and dividends, you are not required to sign the certification, but you must provide your correct TIN. See the instructions for Part II, later.

Sign Here Signature of U.S. person ▶ [signature] Date ▶ 10/11/21

General Instructions

Section references are to the Internal Revenue Code unless otherwise noted.

Future developments. For the latest information about developments related to Form W-9 and its instructions, such as legislation enacted after they were published, go to *www.irs.gov/FormW9.*

Purpose of Form

An individual or entity (Form W-9 requester) who is required to file an information return with the IRS must obtain your correct taxpayer identification number (TIN) which may be your social security number (SSN), individual taxpayer identification number (ITIN), adoption taxpayer identification number (ATIN), or employer identification number (EIN), to report on an information return the amount paid to you, or other amount reportable on an information return. Examples of information returns include, but are not limited to, the following.

- Form 1099-INT (interest earned or paid)
- Form 1099-DIV (dividends, including those from stocks or mutual funds)
- Form 1099-MISC (various types of income, prizes, awards, or gross proceeds)
- Form 1099-B (stock or mutual fund sales and certain other transactions by brokers)
- Form 1099-S (proceeds from real estate transactions)
- Form 1099-K (merchant card and third party network transactions)
- Form 1098 (home mortgage interest), 1098-E (student loan interest), 1098-T (tuition)
- Form 1099-C (canceled debt)
- Form 1099-A (acquisition or abandonment of secured property)

Use Form W-9 only if you are a U.S. person (including a resident alien), to provide your correct TIN.

If you do not return Form W-9 to the requester with a TIN, you might be subject to backup withholding. See What is backup withholding, *later.*

By signing the filled-out form, you:

1. Certify that the TIN you are giving is correct (or you are waiting for a number to be issued),

2. Certify that you are not subject to backup withholding, or

3. Claim exemption from backup withholding if you are a U.S. exempt payee. If applicable, you are also certifying that as a U.S. person, your allocable share of any partnership income from a U.S. trade or business is not subject to the withholding tax on foreign partners' share of effectively connected income, and

4. Certify that FATCA code(s) entered on this form (if any) indicating that you are exempt from the FATCA reporting, is correct. See *What is FATCA reporting*, later, for further information.

Note: If you are a U.S. person and a requester gives you a form other than Form W-9 to request your TIN, you must use the requester's form if it is substantially similar to this Form W-9.

Definition of a U.S. person. For federal tax purposes, you are considered a U.S. person if you are:

- An individual who is a U.S. citizen or U.S. resident alien;
- A partnership, corporation, company, or association created or organized in the United States or under the laws of the United States;
- An estate (other than a foreign estate); or
- A domestic trust (as defined in Regulations section 301.7701-7).

Special rules for partnerships. Partnerships that conduct a trade or business in the United States are generally required to pay a withholding tax under section 1446 on any foreign partners' share of effectively connected taxable income from such business. Further, in certain cases where a Form W-9 has not been received, the rules under section 1446 require a partnership to presume that a partner is a foreign person, and pay the section 1446 withholding tax. Therefore, if you are a U.S. person that is a partner in a partnership conducting a trade or business in the United States, provide Form W-9 to the partnership to establish your U.S. status and avoid section 1446 withholding on your share of partnership income.

In the cases below, the following person must give Form W-9 to the partnership for purposes of establishing its U.S. status and avoiding withholding on its allocable share of net income from the partnership conducting a trade or business in the United States.

- In the case of a disregarded entity with a U.S. owner, the U.S. owner of the disregarded entity and not the entity;
- In the case of a grantor trust with a U.S. grantor or other U.S. owner, generally, the U.S. grantor or other U.S. owner of the grantor trust and not the trust; and
- In the case of a U.S. trust (other than a grantor trust), the U.S. trust (other than a grantor trust) and not the beneficiaries of the trust.

Foreign person. If you are a foreign person or the U.S. branch of a foreign bank that has elected to be treated as a U.S. person, do not use Form W-9. Instead, use the appropriate Form W-8 or Form 8233 (see Pub. 515, Withholding of Tax on Nonresident Aliens and Foreign Entities).

Nonresident alien who becomes a resident alien. Generally, only a nonresident alien individual may use the terms of a tax treaty to reduce or eliminate U.S. tax on certain types of income. However, most tax treaties contain a provision known as a "saving clause." Exceptions specified in the saving clause may permit an exemption from tax to continue for certain types of income even after the payee has otherwise become a U.S. resident alien for tax purposes.

If you are a U.S. resident alien who is relying on an exception contained in the saving clause of a tax treaty to claim an exemption from U.S. tax on certain types of income, you must attach a statement to Form W-9 that specifies the following five items.

1. The treaty country. Generally, this must be the same treaty under which you claimed exemption from tax as a nonresident alien.

2. The treaty article addressing the income.

3. The article number (or location) in the tax treaty that contains the saving clause and its exceptions.

4. The type and amount of income that qualifies for the exemption from tax.

5. Sufficient facts to justify the exemption from tax under the terms of the treaty article.

Example. Article 20 of the U.S.-China income tax treaty allows an exemption from tax for scholarship income received by a Chinese student temporarily present in the United States. Under U.S. law, this student will become a resident alien for tax purposes if his or her stay in the United States exceeds 5 calendar years. However, paragraph 2 of the first Protocol to the U.S.-China treaty (dated April 30, 1984) allows the provisions of Article 20 to continue to apply even after the Chinese student becomes a resident alien of the United States. A Chinese student who qualifies for this exception (under paragraph 2 of the first protocol) and is relying on this exception to claim an exemption from tax on his or her scholarship or fellowship income would attach to Form W-9 a statement that includes the information described above to support that exemption.

If you are a nonresident alien or a foreign entity, give the requester the appropriate completed Form W-8 or Form 8233.

Backup Withholding

What is backup withholding? Persons making certain payments to you must under certain conditions withhold and pay to the IRS 24% of such payments. This is called "backup withholding." Payments that may be subject to backup withholding include interest, tax-exempt interest, dividends, broker and barter exchange transactions, rents, royalties, nonemployee pay, payments made in settlement of payment card and third party network transactions, and certain payments from fishing boat operators. Real estate transactions are not subject to backup withholding.

You will not be subject to backup withholding on payments you receive if you give the requester your correct TIN, make the proper certifications, and report all your taxable interest and dividends on your tax return.

Payments you receive will be subject to backup withholding if:

1. You do not furnish your TIN to the requester,

2. You do not certify your TIN when required (see the instructions for Part II for details),

3. The IRS tells the requester that you furnished an incorrect TIN,

4. The IRS tells you that you are subject to backup withholding because you did not report all your interest and dividends on your tax return (for reportable interest and dividends only), or

5. You do not certify to the requester that you are not subject to backup withholding under 4 above (for reportable interest and dividend accounts opened after 1983 only).

Certain payees and payments are exempt from backup withholding. See *Exempt payee code*, later, and the separate Instructions for the Requester of Form W-9 for more information.

Also see *Special rules for partnerships*, earlier.

What is FATCA Reporting?

The Foreign Account Tax Compliance Act (FATCA) requires a participating foreign financial institution to report all United States account holders that are specified United States persons. Certain payees are exempt from FATCA reporting. See *Exemption from FATCA reporting code*, later, and the Instructions for the Requester of Form W-9 for more information.

Updating Your Information

You must provide updated information to any person to whom you claimed to be an exempt payee if you are no longer an exempt payee and anticipate receiving reportable payments in the future from this person. For example, you may need to provide updated information if you are a C corporation that elects to be an S corporation, or if you no longer are tax exempt. In addition, you must furnish a new Form W-9 if the name or TIN changes for the account; for example, if the grantor of a grantor trust dies.

Penalties

Failure to furnish TIN. If you fail to furnish your correct TIN to a requester, you are subject to a penalty of $50 for each such failure unless your failure is due to reasonable cause and not to willful neglect.

Civil penalty for false information with respect to withholding. If you make a false statement with no reasonable basis that results in no backup withholding, you are subject to a $500 penalty.

Criminal penalty for falsifying information. Willfully falsifying certifications or affirmations may subject you to criminal penalties including fines and/or imprisonment.

Misuse of TINs. If the requester discloses or uses TINs in violation of federal law, the requester may be subject to civil and criminal penalties.

Specific Instructions

Line 1

You must enter one of the following on this line; **do not** leave this line blank. The name should match the name on your tax return.

If this Form W-9 is for a joint account (other than an account maintained by a foreign financial institution (FFI)), list first, and then circle, the name of the person or entity whose number you entered in Part I of Form W-9. If you are providing Form W-9 to an FFI to document a joint account, each holder of the account that is a U.S. person must provide a Form W-9.

a. **Individual.** Generally, enter the name shown on your tax return. If you have changed your last name without informing the Social Security Administration (SSA) of the name change, enter your first name, the last name as shown on your social security card, and your new last name.

Note: ITIN applicant: Enter your individual name as it was entered on your Form W-7 application, line 1a. This should also be the same as the name you entered on the Form 1040/1040A/1040EZ you filed with your application.

b. **Sole proprietor or single-member LLC.** Enter your individual name as shown on your 1040/1040A/1040EZ on line 1. You may enter your business, trade, or "doing business as" (DBA) name on line 2.

c. **Partnership, LLC that is not a single-member LLC, C corporation, or S corporation.** Enter the entity's name as shown on the entity's tax return on line 1 and any business, trade, or DBA name on line 2.

d. **Other entities.** Enter your name as shown on required U.S. federal tax documents on line 1. This name should match the name shown on the charter or other legal document creating the entity. You may enter any business, trade, or DBA name on line 2.

e. **Disregarded entity.** For U.S. federal tax purposes, an entity that is disregarded as an entity separate from its owner is treated as a "disregarded entity." See Regulations section 301.7701-2(c)(2)(iii). Enter the owner's name on line 1. The name of the entity entered on line 1 should never be a disregarded entity. The name on line 1 should be the name shown on the income tax return on which the income should be reported. For example, if a foreign LLC that is treated as a disregarded entity for U.S. federal tax purposes has a single owner that is a U.S. person, the U.S. owner's name is required to be provided on line 1. If the direct owner of the entity is also a disregarded entity, enter the first owner that is not disregarded for federal tax purposes. Enter the disregarded entity's name on line 2, "Business name/disregarded entity name." If the owner of the disregarded entity is a foreign person, the owner must complete an appropriate Form W-8 instead of a Form W-9. This is the case even if the foreign person has a U.S. TIN.

Line 2

If you have a business name, trade name, DBA name, or disregarded entity name, you may enter it on line 2.

Line 3

Check the appropriate box on line 3 for the U.S. federal tax classification of the person whose name is entered on line 1. Check only one box on line 3.

IF the entity/person on line 1 is a(n) . . .	THEN check the box for . . .
• Corporation	Corporation
• Individual • Sole proprietorship, or • Single-member limited liability company (LLC) owned by an individual and disregarded for U.S. federal tax purposes.	Individual/sole proprietor or single-member LLC
• LLC treated as a partnership for U.S. federal tax purposes, • LLC that has filed Form 8832 or 2553 to be taxed as a corporation, or • LLC that is disregarded as an entity separate from its owner but the owner is another LLC that is not disregarded for U.S. federal tax purposes.	Limited liability company and enter the appropriate tax classification. (P= Partnership; C= C corporation; or S= S corporation)
• Partnership	Partnership
• Trust/estate	Trust/estate

Line 4, Exemptions

If you are exempt from backup withholding and/or FATCA reporting, enter in the appropriate space on line 4 any code(s) that may apply to you.

Exempt payee code.

- Generally, individuals (including sole proprietors) are not exempt from backup withholding.
- Except as provided below, corporations are exempt from backup withholding for certain payments, including interest and dividends.
- Corporations are not exempt from backup withholding for payments made in settlement of payment card or third party network transactions.
- Corporations are not exempt from backup withholding with respect to attorneys' fees or gross proceeds paid to attorneys, and corporations that provide medical or health care services are not exempt with respect to payments reportable on Form 1099-MISC.

The following codes identify payees that are exempt from backup withholding. Enter the appropriate code in the space in line 4.

1—An organization exempt from tax under section 501(a), any IRA, or a custodial account under section 403(b)(7) if the account satisfies the requirements of section 401(f)(2)

2—The United States or any of its agencies or instrumentalities

3—A state, the District of Columbia, a U.S. commonwealth or possession, or any of their political subdivisions or instrumentalities

4—A foreign government or any of its political subdivisions, agencies, or instrumentalities

5—A corporation

6—A dealer in securities or commodities required to register in the United States, the District of Columbia, or a U.S. commonwealth or possession

7—A futures commission merchant registered with the Commodity Futures Trading Commission

8—A real estate investment trust

9—An entity registered at all times during the tax year under the Investment Company Act of 1940

10—A common trust fund operated by a bank under section 584(a)

11—A financial institution

12—A middleman known in the investment community as a nominee or custodian

13—A trust exempt from tax under section 664 or described in section 4947

The following chart shows types of payments that may be exempt from backup withholding. The chart applies to the exempt payees listed above, 1 through 13.

IF the payment is for . . .	THEN the payment is exempt for . . .
Interest and dividend payments	All exempt payees except for 7
Broker transactions	Exempt payees 1 through 4 and 6 through 11 and all C corporations. S corporations must not enter an exempt payee code because they are exempt only for sales of noncovered securities acquired prior to 2012.
Barter exchange transactions and patronage dividends	Exempt payees 1 through 4
Payments over $600 required to be reported and direct sales over $5,000[1]	Generally, exempt payees 1 through 5[2]
Payments made in settlement of payment card or third party network transactions	Exempt payees 1 through 4

[1] See Form 1099-MISC, Miscellaneous Income, and its instructions.

[2] However, the following payments made to a corporation and reportable on Form 1099-MISC are not exempt from backup withholding: medical and health care payments, attorneys' fees, gross proceeds paid to an attorney reportable under section 6045(f), and payments for services paid by a federal executive agency.

Exemption from FATCA reporting code. The following codes identify payees that are exempt from reporting under FATCA. These codes apply to persons submitting this form for accounts maintained outside of the United States by certain foreign financial institutions. Therefore, if you are only submitting this form for an account you hold in the United States, you may leave this field blank. Consult with the person requesting this form if you are uncertain if the financial institution is subject to these requirements. A requester may indicate that a code is not required by providing you with a Form W-9 with "Not Applicable" (or any similar indication) written or printed on the line for a FATCA exemption code.

A—An organization exempt from tax under section 501(a) or any individual retirement plan as defined in section 7701(a)(37)

B—The United States or any of its agencies or instrumentalities

C—A state, the District of Columbia, a U.S. commonwealth or possession, or any of their political subdivisions or instrumentalities

D—A corporation the stock of which is regularly traded on one or more established securities markets, as described in Regulations section 1.1472-1(c)(1)(i)

E—A corporation that is a member of the same expanded affiliated group as a corporation described in Regulations section 1.1472-1(c)(1)(i)

F—A dealer in securities, commodities, or derivative financial instruments (including notional principal contracts, futures, forwards, and options) that is registered as such under the laws of the United States or any state

G—A real estate investment trust

H—A regulated investment company as defined in section 851 or an entity registered at all times during the tax year under the Investment Company Act of 1940

I—A common trust fund as defined in section 584(a)

J—A bank as defined in section 581

K—A broker

L—A trust exempt from tax under section 664 or described in section 4947(a)(1)

M—A tax exempt trust under a section 403(b) plan or section 457(g) plan

Note: You may wish to consult with the financial institution requesting this form to determine whether the FATCA code and/or exempt payee code should be completed.

Line 5

Enter your address (number, street, and apartment or suite number). This is where the requester of this Form W-9 will mail your information returns. If this address differs from the one the requester already has on file, write NEW at the top. If a new address is provided, there is still a chance the old address will be used until the payor changes your address in their records.

Line 6

Enter your city, state, and ZIP code.

Part I. Taxpayer Identification Number (TIN)

Enter your TIN in the appropriate box. If you are a resident alien and you do not have and are not eligible to get an SSN, your TIN is your IRS individual taxpayer identification number (ITIN). Enter it in the social security number box. If you do not have an ITIN, see *How to get a TIN* below.

If you are a sole proprietor and you have an EIN, you may enter either your SSN or EIN.

If you are a single-member LLC that is disregarded as an entity separate from its owner, enter the owner's SSN (or EIN, if the owner has one). Do not enter the disregarded entity's EIN. If the LLC is classified as a corporation or partnership, enter the entity's EIN.

Note: See *What Name and Number To Give the Requester,* later, for further clarification of name and TIN combinations.

How to get a TIN. If you do not have a TIN, apply for one immediately. To apply for an SSN, get Form SS-5, Application for a Social Security Card, from your local SSA office or get this form online at *www.SSA.gov*. You may also get this form by calling 1-800-772-1213. Use Form W-7, Application for IRS Individual Taxpayer Identification Number, to apply for an ITIN, or Form SS-4, Application for Employer Identification Number, to apply for an EIN. You can apply for an EIN online by accessing the IRS website at *www.irs.gov/Businesses* and clicking on Employer Identification Number (EIN) under Starting a Business. Go to *www.irs.gov/Forms* to view, download, or print Form W-7 and/or Form SS-4. Or, you can go to *www.irs.gov/OrderForms* to place an order and have Form W-7 and/or SS-4 mailed to you within 10 business days.

If you are asked to complete Form W-9 but do not have a TIN, apply for a TIN and write "Applied For" in the space for the TIN, sign and date the form, and give it to the requester. For interest and dividend payments, and certain payments made with respect to readily tradable instruments, generally you will have 60 days to get a TIN and give it to the requester before you are subject to backup withholding on payments. The 60-day rule does not apply to other types of payments. You will be subject to backup withholding on all such payments until you provide your TIN to the requester.

Note: Entering "Applied For" means that you have already applied for a TIN or that you intend to apply for one soon.

Caution: A disregarded U.S. entity that has a foreign owner must use the appropriate Form W-8.

Part II. Certification

To establish to the withholding agent that you are a U.S. person, or resident alien, sign Form W-9. You may be requested to sign by the withholding agent even if item 1, 4, or 5 below indicates otherwise.

For a joint account, only the person whose TIN is shown in Part I should sign (when required). In the case of a disregarded entity, the person identified on line 1 must sign. Exempt payees, see *Exempt payee code,* earlier.

Signature requirements. Complete the certification as indicated in items 1 through 5 below.

1. Interest, dividend, and barter exchange accounts opened before 1984 and broker accounts considered active during 1983. You must give your correct TIN, but you do not have to sign the certification.

2. Interest, dividend, broker, and barter exchange accounts opened after 1983 and broker accounts considered inactive during 1983. You must sign the certification or backup withholding will apply. If you are subject to backup withholding and you are merely providing your correct TIN to the requester, you must cross out item 2 in the certification before signing the form.

3. Real estate transactions. You must sign the certification. You may cross out item 2 of the certification.

4. Other payments. You must give your correct TIN, but you do not have to sign the certification unless you have been notified that you have previously given an incorrect TIN. "Other payments" include payments made in the course of the requester's trade or business for rents, royalties, goods (other than bills for merchandise), medical and health care services (including payments to corporations), payments to a nonemployee for services, payments made in settlement of payment card and third party network transactions, payments to certain fishing boat crew members and fishermen, and gross proceeds paid to attorneys (including payments to corporations).

5. Mortgage interest paid by you, acquisition or abandonment of secured property, cancellation of debt, qualified tuition program payments (under section 529), ABLE accounts (under section 529A), IRA, Coverdell ESA, Archer MSA or HSA contributions or distributions, and pension distributions. You must give your correct TIN, but you do not have to sign the certification.

What Name and Number To Give the Requester

For this type of account:	Give name and SSN of:
1. Individual	The individual
2. Two or more individuals (joint account) other than an account maintained by an FFI	The actual owner of the account or, if combined funds, the first individual on the account[1]
3. Two or more U.S. persons (joint account maintained by an FFI)	Each holder of the account
4. Custodial account of a minor (Uniform Gift to Minors Act)	The minor[2]
5. a. The usual revocable savings trust (grantor is also trustee)	The grantor-trustee[1]
b. So-called trust account that is not a legal or valid trust under state law	The actual owner[1]
6. Sole proprietorship or disregarded entity owned by an individual	The owner[3]
7. Grantor trust filing under Optional Form 1099 Filing Method 1 (see Regulations section 1.671-4(b)(2)(i)(A))	The grantor*
For this type of account:	**Give name and EIN of:**
8. Disregarded entity not owned by an individual	The owner
9. A valid trust, estate, or pension trust	Legal entity[4]
10. Corporation or LLC electing corporate status on Form 8832 or Form 2553	The corporation
11. Association, club, religious, charitable, educational, or other tax-exempt organization	The organization
12. Partnership or multi-member LLC	The partnership
13. A broker or registered nominee	The broker or nominee
14. Account with the Department of Agriculture in the name of a public entity (such as a state or local government, school district, or prison) that receives agricultural program payments	The public entity
15. Grantor trust filing under the Form 1041 Filing Method or the Optional Form 1099 Filing Method 2 (see Regulations section 1.671-4(b)(2)(i)(B))	The trust

[1] List first and circle the name of the person whose number you furnish. If only one person on a joint account has an SSN, that person's number must be furnished.

[2] Circle the minor's name and furnish the minor's SSN.

[3] You must show your individual name and you may also enter your business or DBA name on the "Business name/disregarded entity" name line. You may use either your SSN or EIN (if you have one), but the IRS encourages you to use your SSN.

[4] List first and circle the name of the trust, estate, or pension trust. (Do not furnish the TIN of the personal representative or trustee unless the legal entity itself is not designated in the account title.) Also see *Special rules for partnerships*, earlier.

***Note:** The grantor also must provide a Form W-9 to trustee of trust.

Note: If no name is circled when more than one name is listed, the number will be considered to be that of the first name listed.

Secure Your Tax Records From Identity Theft

Identity theft occurs when someone uses your personal information such as your name, SSN, or other identifying information, without your permission, to commit fraud or other crimes. An identity thief may use your SSN to get a job or may file a tax return using your SSN to receive a refund.

To reduce your risk:

- Protect your SSN,
- Ensure your employer is protecting your SSN, and
- Be careful when choosing a tax preparer.

If your tax records are affected by identity theft and you receive a notice from the IRS, respond right away to the name and phone number printed on the IRS notice or letter.

If your tax records are not currently affected by identity theft but you think you are at risk due to a lost or stolen purse or wallet, questionable credit card activity or credit report, contact the IRS Identity Theft Hotline at 1-800-908-4490 or submit Form 14039.

For more information, see Pub. 5027, Identity Theft Information for Taxpayers.

Victims of identity theft who are experiencing economic harm or a systemic problem, or are seeking help in resolving tax problems that have not been resolved through normal channels, may be eligible for Taxpayer Advocate Service (TAS) assistance. You can reach TAS by calling the TAS toll-free case intake line at 1-877-777-4778 or TTY/TDD 1-800-829-4059.

Protect yourself from suspicious emails or phishing schemes. Phishing is the creation and use of email and websites designed to mimic legitimate business emails and websites. The most common act is sending an email to a user falsely claiming to be an established legitimate enterprise in an attempt to scam the user into surrendering private information that will be used for identity theft.

The IRS does not initiate contacts with taxpayers via emails. Also, the IRS does not request personal detailed information through email or ask taxpayers for the PIN numbers, passwords, or similar secret access information for their credit card, bank, or other financial accounts.

If you receive an unsolicited email claiming to be from the IRS, forward this message to *phishing@irs.gov*. You may also report misuse of the IRS name, logo, or other IRS property to the Treasury Inspector General for Tax Administration (TIGTA) at 1-800-366-4484. You can forward suspicious emails to the Federal Trade Commission at *spam@uce.gov* or report them at *www.ftc.gov/complaint*. You can contact the FTC at *www.ftc.gov/idtheft* or 877-IDTHEFT (877-438-4338). If you have been the victim of identity theft, see *www.IdentityTheft.gov* and Pub. 5027.

Visit *www.irs.gov/IdentityTheft* to learn more about identity theft and how to reduce your risk.

Privacy Act Notice

Section 6109 of the Internal Revenue Code requires you to provide your correct TIN to persons (including federal agencies) who are required to file information returns with the IRS to report interest, dividends, or certain other income paid to you; mortgage interest you paid; the acquisition or abandonment of secured property; the cancellation of debt; or contributions you made to an IRA, Archer MSA, or HSA. The person collecting this form uses the information on the form to file information returns with the IRS, reporting the above information. Routine uses of this information include giving it to the Department of Justice for civil and criminal litigation and to cities, states, the District of Columbia, and U.S. commonwealths and possessions for use in administering their laws. The information also may be disclosed to other countries under a treaty, to federal and state agencies to enforce civil and criminal laws, or to federal law enforcement and intelligence agencies to combat terrorism. You must provide your TIN whether or not you are required to file a tax return. Under section 3406, payers must generally withhold a percentage of taxable interest, dividend, and certain other payments to a payee who does not give a TIN to the payer. Certain penalties may also apply for providing false or fraudulent information.

BRUCE VICKERS, TAX COLLECTOR
OSCEOLA COUNTY, STATE OF FLORIDA
LOCAL BUSINESS TAX RECEIPT

EXPIRATION
SEPTEMBER 30, 2024

ACCOUNT NO.
64526

2024
BUSINESS TYPE:
4190 LAWN CARE/LANDSCAPE

09/28/2023
Oper N/A
Till Internet
Paid 30.00
Rcpt.#056534

4190-64526

TRANSFER	0.00
ORIGINAL TAX	30.00
AMOUNT	0.00
PENALTY	0.00
COLLECTION COST	0.00
TOTAL	30.00

BUSINESS:

Florida Commercial Care, Inc.
1215 Armstrong Blvd.
Kissimmee, FL 34741

Location:
CITY OF KISSIMMEE

GV400382

Bruce E. Vickers

BRUCE VICKERS CFC, TAX COLLECTOR
P.O. BOX 422105, KISSIMMEE FL 34742-2105
407-742-4000

THIS RECEIPT IS IN ADDITION AND NOT IN LIEU OF ANY OTHER LICENSE REQUIRED BY LAW OR MUNICIPAL ORDINANCE AND IS SUBJECT TO REGULATIONS OF ZONING, HEALTH, AND ANY OTHER LAWFUL AUTHORITY.

THIS LOCAL BUSINESS TAX RECEIPT IS FURNISHED PURSUANT TO CHAPTER 205 LAWS OF FLORIDA AND OSCEOLA COUNTY ORDINANCE 95-10, AS AMENDED

The law requires this Local Business Tax Receipt to be displayed conspicuously at the place of business in such manner that it can be open to the view of the public and subject to inspection by all duly authorized officers of the County.

Pursuant to State Law, all Local Business Tax Receipts shall expire on September 30th of the succeeding year. Those Local Business Tax Receipts renewed beginning October 1st shall be delinquent and subject to a delinquency penalty of 10% for the month of October, plus an additional 5% penalty for each month of delinquency thereafter until paid; provided that the total delinquency penalty shall not exceed 25% of the Local Business Tax Receipt for the delinquent establishment. A 25% penalty shall be imposed on any person engaged in any new business, occupation or profession without first obtaining an Osceola County Local Business Tax Receipt. PLUS: if delinquent more than 150 days, subject to civil actions and penalties, and a penalty of up to $250.

This receipt is a Local Business Tax only. It does not permit the Local Business Taxpayer to violate any existing regulatory or zoning laws of the state, county, or cities, nor does it exempt the licensee from any other license or permits that may be required by law.

This form becomes a receipt when validated by the Tax Collector. Note: Display in accordance with the county ordinance. Local Business Tax Receipts are subject to change according to law.

Florida Commercial Care, Inc.
Stephen McDowell
1215 Armstong Blvd.
Kissimmee, FL 34741

BRUCE VICKERS, TAX COLLECTOR
OSCEOLA COUNTY, STATE OF FLORIDA
LOCAL BUSINESS TAX RECEIPT

EXPIRATION
SEPTEMBER 30, 2024

ACCOUNT NO.
64526

2024

BUSINESS TYPE:
4190 LAWN CARE/LANDSCAPE

09/28/2023
Oper N/A
Till Internet
Paid 30.00
Rcpt.#056534

4190-64526

TRANSFER	0.00
ORIGINAL TAX	30.00
AMOUNT	0.00
PENALTY	0.00
COLLECTION COST	0.00
TOTAL	30.00

BUSINESS:

Florida Commercial Care, Inc.
1215 Armstrong Blvd.
Kissimmee, FL 34741

Location:
CITY OF KISSIMMEE

GV400382

Bruce E. Vickers

BRUCE VICKERS CFC, TAX COLLECTOR
P.O. BOX 422105, KISSIMMEE FL 34742-2105
407-742-4000

THIS RECEIPT IS IN ADDITION AND NOT IN LIEU OF ANY OTHER LICENSE REQUIRED BY LAW OR MUNICIPAL ORDINANCE AND IS SUBJECT TO REGULATIONS OF ZONING, HEALTH, AND ANY OTHER LAWFUL AUTHORITY.

THIS LOCAL BUSINESS TAX RECEIPT IS FURNISHED PURSUANT TO CHAPTER 205 LAWS OF FLORIDA AND OSCEOLA COUNTY ORDINANCE 95-10, AS AMENDED

The law requires this Local Business Tax Receipt to be displayed conspicuously at the place of business in such manner that it can be open to the view of the public and subject to inspection by all duly authorized officers of the County.

Pursuant to State Law, all Local Business Tax Receipts shall expire on September 30th of the succeeding year. Those Local Business Tax Receipts renewed beginning October 1st shall be delinquent and subject to a delinquency penalty of 10% for the month of October, plus an additional 5% penalty for each month of delinquency thereafter until paid; provided that the total delinquency penalty shall not exceed 25% of the Local Business Tax Receipt for the delinquent establishment. A 25% penalty shall be imposed on any person engaged in any new business, occupation or profession without first obtaining an Osceola County Local Business Tax Receipt. PLUS: if delinquent more than 150 days, subject to civil actions and penalties, and a penalty of up to $250.

This receipt is a Local Business Tax only. It does not permit the Local Business Taxpayer to violate any existing regulatory or zoning laws of the state, county, or cities, nor does it exempt the licensee from any other license or permits that may be required by law.

This form becomes a receipt when validated by the Tax Collector. Note: Display in accordance with the county ordinance. Local Business Tax Receipts are subject to change according to law.

Florida Commercial Care, Inc.
Stephen McDowell
1215 Armstong Blvd.
Kissimmee, FL 34741

Form **W-9**
(Rev. October 2018)
Department of the Treasury
Internal Revenue Service

Request for Taxpayer Identification Number and Certification

▶ **Go to *www.irs.gov/FormW9* for instructions and the latest information.**

Give Form to the requester. Do not send to the IRS.

Print or type. See Specific Instructions on page 3.

1 Name (as shown on your income tax return). Name is required on this line; do not leave this line blank.
Florida Commercial Care, Inc.

2 Business name/disregarded entity name, if different from above

3 Check appropriate box for federal tax classification of the person whose name is entered on line 1. Check only **one** of the following seven boxes.

☐ Individual/sole proprietor or single-member LLC ☐ C Corporation ☒ S Corporation ☐ Partnership ☐ Trust/estate

☐ Limited liability company. Enter the tax classification (C=C corporation, S=S corporation, P=Partnership) ▶ S

Note: Check the appropriate box in the line above for the tax classification of the single-member owner. Do not check LLC if the LLC is classified as a single-member LLC that is disregarded from the owner unless the owner of the LLC is another LLC that is **not** disregarded from the owner for U.S. federal tax purposes. Otherwise, a single-member LLC that is disregarded from the owner should check the appropriate box for the tax classification of its owner.

☐ Other (see instructions) ▶

4 Exemptions (codes apply only to certain entities, not individuals; see instructions on page 3):

Exempt payee code (if any) _____

Exemption from FATCA reporting code (if any) _____

(Applies to accounts maintained outside the U.S.)

5 Address (number, street, and apt. or suite no.) See instructions.
1158 US HWY ALT 19

Requester's name and address (optional)

6 City, state, and ZIP code
Holiday, FL 34691

7 List account number(s) here (optional)

Part I Taxpayer Identification Number (TIN)

Enter your TIN in the appropriate box. The TIN provided must match the name given on line 1 to avoid backup withholding. For individuals, this is generally your social security number (SSN). However, for a resident alien, sole proprietor, or disregarded entity, see the instructions for Part I, later. For other entities, it is your employer identification number (EIN). If you do not have a number, see *How to get a TIN*, later.

Note: If the account is in more than one name, see the instructions for line 1. Also see *What Name and Number To Give the Requester* for guidelines on whose number to enter.

Social security number
			–			–				

or

Employer identification number
5	9	–	3	7	1	0	7	9	0

Part II Certification

Under penalties of perjury, I certify that:

1. The number shown on this form is my correct taxpayer identification number (or I am waiting for a number to be issued to me); and
2. I am not subject to backup withholding because: (a) I am exempt from backup withholding, or (b) I have not been notified by the Internal Revenue Service (IRS) that I am subject to backup withholding as a result of a failure to report all interest or dividends, or (c) the IRS has notified me that I am no longer subject to backup withholding; and
3. I am a U.S. citizen or other U.S. person (defined below); and
4. The FATCA code(s) entered on this form (if any) indicating that I am exempt from FATCA reporting is correct.

Certification instructions. You must cross out item 2 above if you have been notified by the IRS that you are currently subject to backup withholding because you have failed to report all interest and dividends on your tax return. For real estate transactions, item 2 does not apply. For mortgage interest paid, acquisition or abandonment of secured property, cancellation of debt, contributions to an individual retirement arrangement (IRA), and generally, payments other than interest and dividends, you are not required to sign the certification, but you must provide your correct TIN. See the instructions for Part II, later.

Sign Here | **Signature of U.S. person** ▶ [signature] **Date** ▶ 10/11/21

General Instructions

Section references are to the Internal Revenue Code unless otherwise noted.

Future developments. For the latest information about developments related to Form W-9 and its instructions, such as legislation enacted after they were published, go to *www.irs.gov/FormW9*.

Purpose of Form

An individual or entity (Form W-9 requester) who is required to file an information return with the IRS must obtain your correct taxpayer identification number (TIN) which may be your social security number (SSN), individual taxpayer identification number (ITIN), adoption taxpayer identification number (ATIN), or employer identification number (EIN), to report on an information return the amount paid to you, or other amount reportable on an information return. Examples of information returns include, but are not limited to, the following.

- Form 1099-INT (interest earned or paid)
- Form 1099-DIV (dividends, including those from stocks or mutual funds)
- Form 1099-MISC (various types of income, prizes, awards, or gross proceeds)
- Form 1099-B (stock or mutual fund sales and certain other transactions by brokers)
- Form 1099-S (proceeds from real estate transactions)
- Form 1099-K (merchant card and third party network transactions)
- Form 1098 (home mortgage interest), 1098-E (student loan interest), 1098-T (tuition)
- Form 1099-C (canceled debt)
- Form 1099-A (acquisition or abandonment of secured property)

Use Form W-9 only if you are a U.S. person (including a resident alien), to provide your correct TIN.

If you do not return Form W-9 to the requester with a TIN, you might be subject to backup withholding. See What is backup withholding, *later.*

By signing the filled-out form, you:

1. Certify that the TIN you are giving is correct (or you are waiting for a number to be issued),

2. Certify that you are not subject to backup withholding, or

3. Claim exemption from backup withholding if you are a U.S. exempt payee. If applicable, you are also certifying that as a U.S. person, your allocable share of any partnership income from a U.S. trade or business is not subject to the withholding tax on foreign partners' share of effectively connected income, and

4. Certify that FATCA code(s) entered on this form (if any) indicating that you are exempt from the FATCA reporting, is correct. See *What is FATCA reporting,* later, for further information.

Note: If you are a U.S. person and a requester gives you a form other than Form W-9 to request your TIN, you must use the requester's form if it is substantially similar to this Form W-9.

Definition of a U.S. person. For federal tax purposes, you are considered a U.S. person if you are:

- An individual who is a U.S. citizen or U.S. resident alien;
- A partnership, corporation, company, or association created or organized in the United States or under the laws of the United States;
- An estate (other than a foreign estate); or
- A domestic trust (as defined in Regulations section 301.7701-7).

Special rules for partnerships. Partnerships that conduct a trade or business in the United States are generally required to pay a withholding tax under section 1446 on any foreign partners' share of effectively connected taxable income from such business. Further, in certain cases where a Form W-9 has not been received, the rules under section 1446 require a partnership to presume that a partner is a foreign person, and pay the section 1446 withholding tax. Therefore, if you are a U.S. person that is a partner in a partnership conducting a trade or business in the United States, provide Form W-9 to the partnership to establish your U.S. status and avoid section 1446 withholding on your share of partnership income.

In the cases below, the following person must give Form W-9 to the partnership for purposes of establishing its U.S. status and avoiding withholding on its allocable share of net income from the partnership conducting a trade or business in the United States.

- In the case of a disregarded entity with a U.S. owner, the U.S. owner of the disregarded entity and not the entity;
- In the case of a grantor trust with a U.S. grantor or other U.S. owner, generally, the U.S. grantor or other U.S. owner of the grantor trust and not the trust; and
- In the case of a U.S. trust (other than a grantor trust), the U.S. trust (other than a grantor trust) and not the beneficiaries of the trust.

Foreign person. If you are a foreign person or the U.S. branch of a foreign bank that has elected to be treated as a U.S. person, do not use Form W-9. Instead, use the appropriate Form W-8 or Form 8233 (see Pub. 515, Withholding of Tax on Nonresident Aliens and Foreign Entities).

Nonresident alien who becomes a resident alien. Generally, only a nonresident alien individual may use the terms of a tax treaty to reduce or eliminate U.S. tax on certain types of income. However, most tax treaties contain a provision known as a "saving clause." Exceptions specified in the saving clause may permit an exemption from tax to continue for certain types of income even after the payee has otherwise become a U.S. resident alien for tax purposes.

If you are a U.S. resident alien who is relying on an exception contained in the saving clause of a tax treaty to claim an exemption from U.S. tax on certain types of income, you must attach a statement to Form W-9 that specifies the following five items.

1. The treaty country. Generally, this must be the same treaty under which you claimed exemption from tax as a nonresident alien.

2. The treaty article addressing the income.

3. The article number (or location) in the tax treaty that contains the saving clause and its exceptions.

4. The type and amount of income that qualifies for the exemption from tax.

5. Sufficient facts to justify the exemption from tax under the terms of the treaty article.

Example. Article 20 of the U.S.-China income tax treaty allows an exemption from tax for scholarship income received by a Chinese student temporarily present in the United States. Under U.S. law, this student will become a resident alien for tax purposes if his or her stay in the United States exceeds 5 calendar years. However, paragraph 2 of the first Protocol to the U.S.-China treaty (dated April 30, 1984) allows the provisions of Article 20 to continue to apply even after the Chinese student becomes a resident alien of the United States. A Chinese student who qualifies for this exception (under paragraph 2 of the first protocol) and is relying on this exception to claim an exemption from tax on his or her scholarship or fellowship income would attach to Form W-9 a statement that includes the information described above to support that exemption.

If you are a nonresident alien or a foreign entity, give the requester the appropriate completed Form W-8 or Form 8233.

Backup Withholding

What is backup withholding? Persons making certain payments to you must under certain conditions withhold and pay to the IRS 24% of such payments. This is called "backup withholding." Payments that may be subject to backup withholding include interest, tax-exempt interest, dividends, broker and barter exchange transactions, rents, royalties, nonemployee pay, payments made in settlement of payment card and third party network transactions, and certain payments from fishing boat operators. Real estate transactions are not subject to backup withholding.

You will not be subject to backup withholding on payments you receive if you give the requester your correct TIN, make the proper certifications, and report all your taxable interest and dividends on your tax return.

Payments you receive will be subject to backup withholding if:

1. You do not furnish your TIN to the requester,

2. You do not certify your TIN when required (see the instructions for Part II for details),

3. The IRS tells the requester that you furnished an incorrect TIN,

4. The IRS tells you that you are subject to backup withholding because you did not report all your interest and dividends on your tax return (for reportable interest and dividends only), or

5. You do not certify to the requester that you are not subject to backup withholding under 4 above (for reportable interest and dividend accounts opened after 1983 only).

Certain payees and payments are exempt from backup withholding. See *Exempt payee code,* later, and the separate Instructions for the Requester of Form W-9 for more information.

Also see *Special rules for partnerships,* earlier.

What is FATCA Reporting?

The Foreign Account Tax Compliance Act (FATCA) requires a participating foreign financial institution to report all United States account holders that are specified United States persons. Certain payees are exempt from FATCA reporting. See *Exemption from FATCA reporting code,* later, and the Instructions for the Requester of Form W-9 for more information.

Updating Your Information

You must provide updated information to any person to whom you claimed to be an exempt payee if you are no longer an exempt payee and anticipate receiving reportable payments in the future from this person. For example, you may need to provide updated information if you are a C corporation that elects to be an S corporation, or if you no longer are tax exempt. In addition, you must furnish a new Form W-9 if the name or TIN changes for the account; for example, if the grantor of a grantor trust dies.

Penalties

Failure to furnish TIN. If you fail to furnish your correct TIN to a requester, you are subject to a penalty of $50 for each such failure unless your failure is due to reasonable cause and not to willful neglect.

Civil penalty for false information with respect to withholding. If you make a false statement with no reasonable basis that results in no backup withholding, you are subject to a $500 penalty.

Criminal penalty for falsifying information. Willfully falsifying certifications or affirmations may subject you to criminal penalties including fines and/or imprisonment.

Misuse of TINs. If the requester discloses or uses TINs in violation of federal law, the requester may be subject to civil and criminal penalties.

Specific Instructions

Line 1

You must enter one of the following on this line; **do not** leave this line blank. The name should match the name on your tax return.

If this Form W-9 is for a joint account (other than an account maintained by a foreign financial institution (FFI)), list first, and then circle, the name of the person or entity whose number you entered in Part I of Form W-9. If you are providing Form W-9 to an FFI to document a joint account, each holder of the account that is a U.S. person must provide a Form W-9.

a. **Individual.** Generally, enter the name shown on your tax return. If you have changed your last name without informing the Social Security Administration (SSA) of the name change, enter your first name, the last name as shown on your social security card, and your new last name.

Note: ITIN applicant: Enter your individual name as it was entered on your Form W-7 application, line 1a. This should also be the same as the name you entered on the Form 1040/1040A/1040EZ you filed with your application.

b. **Sole proprietor or single-member LLC.** Enter your individual name as shown on your 1040/1040A/1040EZ on line 1. You may enter your business, trade, or "doing business as" (DBA) name on line 2.

c. **Partnership, LLC that is not a single-member LLC, C corporation, or S corporation.** Enter the entity's name as shown on the entity's tax return on line 1 and any business, trade, or DBA name on line 2.

d. **Other entities.** Enter your name as shown on required U.S. federal tax documents on line 1. This name should match the name shown on the charter or other legal document creating the entity. You may enter any business, trade, or DBA name on line 2.

e. **Disregarded entity.** For U.S. federal tax purposes, an entity that is disregarded as an entity separate from its owner is treated as a "disregarded entity." See Regulations section 301.7701-2(c)(2)(iii). Enter the owner's name on line 1. The name of the entity entered on line 1 should never be a disregarded entity. The name on line 1 should be the name shown on the income tax return on which the income should be reported. For example, if a foreign LLC that is treated as a disregarded entity for U.S. federal tax purposes has a single owner that is a U.S. person, the U.S. owner's name is required to be provided on line 1. If the direct owner of the entity is also a disregarded entity, enter the first owner that is not disregarded for federal tax purposes. Enter the disregarded entity's name on line 2, "Business name/disregarded entity name." If the owner of the disregarded entity is a foreign person, the owner must complete an appropriate Form W-8 instead of a Form W-9. This is the case even if the foreign person has a U.S. TIN.

Line 2

If you have a business name, trade name, DBA name, or disregarded entity name, you may enter it on line 2.

Line 3

Check the appropriate box on line 3 for the U.S. federal tax classification of the person whose name is entered on line 1. Check only one box on line 3.

IF the entity/person on line 1 is a(n) . . .	THEN check the box for . . .
• Corporation	Corporation
• Individual • Sole proprietorship, or • Single-member limited liability company (LLC) owned by an individual and disregarded for U.S. federal tax purposes.	Individual/sole proprietor or single-member LLC
• LLC treated as a partnership for U.S. federal tax purposes, • LLC that has filed Form 8832 or 2553 to be taxed as a corporation, or • LLC that is disregarded as an entity separate from its owner but the owner is another LLC that is not disregarded for U.S. federal tax purposes.	Limited liability company and enter the appropriate tax classification. (P= Partnership; C= C corporation; or S= S corporation)
• Partnership	Partnership
• Trust/estate	Trust/estate

Line 4, Exemptions

If you are exempt from backup withholding and/or FATCA reporting, enter in the appropriate space on line 4 any code(s) that may apply to you.

Exempt payee code.

- Generally, individuals (including sole proprietors) are not exempt from backup withholding.
- Except as provided below, corporations are exempt from backup withholding for certain payments, including interest and dividends.
- Corporations are not exempt from backup withholding for payments made in settlement of payment card or third party network transactions.
- Corporations are not exempt from backup withholding with respect to attorneys' fees or gross proceeds paid to attorneys, and corporations that provide medical or health care services are not exempt with respect to payments reportable on Form 1099-MISC.

The following codes identify payees that are exempt from backup withholding. Enter the appropriate code in the space in line 4.

1—An organization exempt from tax under section 501(a), any IRA, or a custodial account under section 403(b)(7) if the account satisfies the requirements of section 401(f)(2)

2—The United States or any of its agencies or instrumentalities

3—A state, the District of Columbia, a U.S. commonwealth or possession, or any of their political subdivisions or instrumentalities

4—A foreign government or any of its political subdivisions, agencies, or instrumentalities

5—A corporation

6—A dealer in securities or commodities required to register in the United States, the District of Columbia, or a U.S. commonwealth or possession

7—A futures commission merchant registered with the Commodity Futures Trading Commission

8—A real estate investment trust

9—An entity registered at all times during the tax year under the Investment Company Act of 1940

10—A common trust fund operated by a bank under section 584(a)

11—A financial institution

12—A middleman known in the investment community as a nominee or custodian

13—A trust exempt from tax under section 664 or described in section 4947

The following chart shows types of payments that may be exempt from backup withholding. The chart applies to the exempt payees listed above, 1 through 13.

IF the payment is for . . .	THEN the payment is exempt for . . .
Interest and dividend payments	All exempt payees except for 7
Broker transactions	Exempt payees 1 through 4 and 6 through 11 and all C corporations. S corporations must not enter an exempt payee code because they are exempt only for sales of noncovered securities acquired prior to 2012.
Barter exchange transactions and patronage dividends	Exempt payees 1 through 4
Payments over $600 required to be reported and direct sales over $5,000[1]	Generally, exempt payees 1 through 5[2]
Payments made in settlement of payment card or third party network transactions	Exempt payees 1 through 4

[1] See Form 1099-MISC, Miscellaneous Income, and its instructions.

[2] However, the following payments made to a corporation and reportable on Form 1099-MISC are not exempt from backup withholding: medical and health care payments, attorneys' fees, gross proceeds paid to an attorney reportable under section 6045(f), and payments for services paid by a federal executive agency.

Exemption from FATCA reporting code. The following codes identify payees that are exempt from reporting under FATCA. These codes apply to persons submitting this form for accounts maintained outside of the United States by certain foreign financial institutions. Therefore, if you are only submitting this form for an account you hold in the United States, you may leave this field blank. Consult with the person requesting this form if you are uncertain if the financial institution is subject to these requirements. A requester may indicate that a code is not required by providing you with a Form W-9 with "Not Applicable" (or any similar indication) written or printed on the line for a FATCA exemption code.

A—An organization exempt from tax under section 501(a) or any individual retirement plan as defined in section 7701(a)(37)

B—The United States or any of its agencies or instrumentalities

C—A state, the District of Columbia, a U.S. commonwealth or possession, or any of their political subdivisions or instrumentalities

D—A corporation the stock of which is regularly traded on one or more established securities markets, as described in Regulations section 1.1472-1(c)(1)(i)

E—A corporation that is a member of the same expanded affiliated group as a corporation described in Regulations section 1.1472-1(c)(1)(i)

F—A dealer in securities, commodities, or derivative financial instruments (including notional principal contracts, futures, forwards, and options) that is registered as such under the laws of the United States or any state

G—A real estate investment trust

H—A regulated investment company as defined in section 851 or an entity registered at all times during the tax year under the Investment Company Act of 1940

I—A common trust fund as defined in section 584(a)

J—A bank as defined in section 581

K—A broker

L—A trust exempt from tax under section 664 or described in section 4947(a)(1)

M—A tax exempt trust under a section 403(b) plan or section 457(g) plan

Note: You may wish to consult with the financial institution requesting this form to determine whether the FATCA code and/or exempt payee code should be completed.

Line 5

Enter your address (number, street, and apartment or suite number). This is where the requester of this Form W-9 will mail your information returns. If this address differs from the one the requester already has on file, write NEW at the top. If a new address is provided, there is still a chance the old address will be used until the payor changes your address in their records.

Line 6

Enter your city, state, and ZIP code.

Part I. Taxpayer Identification Number (TIN)

Enter your TIN in the appropriate box. If you are a resident alien and you do not have and are not eligible to get an SSN, your TIN is your IRS individual taxpayer identification number (ITIN). Enter it in the social security number box. If you do not have an ITIN, see *How to get a TIN* below.

If you are a sole proprietor and you have an EIN, you may enter either your SSN or EIN.

If you are a single-member LLC that is disregarded as an entity separate from its owner, enter the owner's SSN (or EIN, if the owner has one). Do not enter the disregarded entity's EIN. If the LLC is classified as a corporation or partnership, enter the entity's EIN.

Note: See *What Name and Number To Give the Requester,* later, for further clarification of name and TIN combinations.

How to get a TIN. If you do not have a TIN, apply for one immediately. To apply for an SSN, get Form SS-5, Application for a Social Security Card, from your local SSA office or get this form online at *www.SSA.gov*. You may also get this form by calling 1-800-772-1213. Use Form W-7, Application for IRS Individual Taxpayer Identification Number, to apply for an ITIN, or Form SS-4, Application for Employer Identification Number, to apply for an EIN. You can apply for an EIN online by accessing the IRS website at *www.irs.gov/Businesses* and clicking on Employer Identification Number (EIN) under Starting a Business. Go to *www.irs.gov/Forms* to view, download, or print Form W-7 and/or Form SS-4. Or, you can go to *www.irs.gov/OrderForms* to place an order and have Form W-7 and/or SS-4 mailed to you within 10 business days.

If you are asked to complete Form W-9 but do not have a TIN, apply for a TIN and write "Applied For" in the space for the TIN, sign and date the form, and give it to the requester. For interest and dividend payments, and certain payments made with respect to readily tradable instruments, generally you will have 60 days to get a TIN and give it to the requester before you are subject to backup withholding on payments. The 60-day rule does not apply to other types of payments. You will be subject to backup withholding on all such payments until you provide your TIN to the requester.

Note: Entering "Applied For" means that you have already applied for a TIN or that you intend to apply for one soon.

Caution: A disregarded U.S. entity that has a foreign owner must use the appropriate Form W-8.

Part II. Certification

To establish to the withholding agent that you are a U.S. person, or resident alien, sign Form W-9. You may be requested to sign by the withholding agent even if item 1, 4, or 5 below indicates otherwise.

For a joint account, only the person whose TIN is shown in Part I should sign (when required). In the case of a disregarded entity, the person identified on line 1 must sign. Exempt payees, see *Exempt payee code,* earlier.

Signature requirements. Complete the certification as indicated in items 1 through 5 below.

1. Interest, dividend, and barter exchange accounts opened before 1984 and broker accounts considered active during 1983. You must give your correct TIN, but you do not have to sign the certification.

2. Interest, dividend, broker, and barter exchange accounts opened after 1983 and broker accounts considered inactive during 1983. You must sign the certification or backup withholding will apply. If you are subject to backup withholding and you are merely providing your correct TIN to the requester, you must cross out item 2 in the certification before signing the form.

3. Real estate transactions. You must sign the certification. You may cross out item 2 of the certification.

4. Other payments. You must give your correct TIN, but you do not have to sign the certification unless you have been notified that you have previously given an incorrect TIN. "Other payments" include payments made in the course of the requester's trade or business for rents, royalties, goods (other than bills for merchandise), medical and health care services (including payments to corporations), payments to a nonemployee for services, payments made in settlement of payment card and third party network transactions, payments to certain fishing boat crew members and fishermen, and gross proceeds paid to attorneys (including payments to corporations).

5. Mortgage interest paid by you, acquisition or abandonment of secured property, cancellation of debt, qualified tuition program payments (under section 529), ABLE accounts (under section 529A), IRA, Coverdell ESA, Archer MSA or HSA contributions or distributions, and pension distributions. You must give your correct TIN, but you do not have to sign the certification.

What Name and Number To Give the Requester

For this type of account:	Give name and SSN of:
1. Individual	The individual
2. Two or more individuals (joint account) other than an account maintained by an FFI	The actual owner of the account or, if combined funds, the first individual on the account[1]
3. Two or more U.S. persons (joint account maintained by an FFI)	Each holder of the account
4. Custodial account of a minor (Uniform Gift to Minors Act)	The minor[2]
5. a. The usual revocable savings trust (grantor is also trustee)	The grantor-trustee[1]
b. So-called trust account that is not a legal or valid trust under state law	The actual owner[1]
6. Sole proprietorship or disregarded entity owned by an individual	The owner[3]
7. Grantor trust filing under Optional Form 1099 Filing Method 1 (see Regulations section 1.671-4(b)(2)(i)(A))	The grantor*
For this type of account:	**Give name and EIN of:**
8. Disregarded entity not owned by an individual	The owner
9. A valid trust, estate, or pension trust	Legal entity[4]
10. Corporation or LLC electing corporate status on Form 8832 or Form 2553	The corporation
11. Association, club, religious, charitable, educational, or other tax-exempt organization	The organization
12. Partnership or multi-member LLC	The partnership
13. A broker or registered nominee	The broker or nominee
14. Account with the Department of Agriculture in the name of a public entity (such as a state or local government, school district, or prison) that receives agricultural program payments	The public entity
15. Grantor trust filing under the Form 1041 Filing Method or the Optional Form 1099 Filing Method 2 (see Regulations section 1.671-4(b)(2)(i)(B))	The trust

[1] List first and circle the name of the person whose number you furnish. If only one person on a joint account has an SSN, that person's number must be furnished.

[2] Circle the minor's name and furnish the minor's SSN.

[3] You must show your individual name and you may also enter your business or DBA name on the "Business name/disregarded entity" name line. You may use either your SSN or EIN (if you have one), but the IRS encourages you to use your SSN.

[4] List first and circle the name of the trust, estate, or pension trust. (Do not furnish the TIN of the personal representative or trustee unless the legal entity itself is not designated in the account title.) Also see *Special rules for partnerships*, earlier.

***Note:** The grantor also must provide a Form W-9 to trustee of trust.

Note: If no name is circled when more than one name is listed, the number will be considered to be that of the first name listed.

Secure Your Tax Records From Identity Theft

Identity theft occurs when someone uses your personal information such as your name, SSN, or other identifying information, without your permission, to commit fraud or other crimes. An identity thief may use your SSN to get a job or may file a tax return using your SSN to receive a refund.

To reduce your risk:

- Protect your SSN,
- Ensure your employer is protecting your SSN, and
- Be careful when choosing a tax preparer.

If your tax records are affected by identity theft and you receive a notice from the IRS, respond right away to the name and phone number printed on the IRS notice or letter.

If your tax records are not currently affected by identity theft but you think you are at risk due to a lost or stolen purse or wallet, questionable credit card activity or credit report, contact the IRS Identity Theft Hotline at 1-800-908-4490 or submit Form 14039.

For more information, see Pub. 5027, Identity Theft Information for Taxpayers.

Victims of identity theft who are experiencing economic harm or a systemic problem, or are seeking help in resolving tax problems that have not been resolved through normal channels, may be eligible for Taxpayer Advocate Service (TAS) assistance. You can reach TAS by calling the TAS toll-free case intake line at 1-877-777-4778 or TTY/TDD 1-800-829-4059.

Protect yourself from suspicious emails or phishing schemes. Phishing is the creation and use of email and websites designed to mimic legitimate business emails and websites. The most common act is sending an email to a user falsely claiming to be an established legitimate enterprise in an attempt to scam the user into surrendering private information that will be used for identity theft.

The IRS does not initiate contacts with taxpayers via emails. Also, the IRS does not request personal detailed information through email or ask taxpayers for the PIN numbers, passwords, or similar secret access information for their credit card, bank, or other financial accounts.

If you receive an unsolicited email claiming to be from the IRS, forward this message to *phishing@irs.gov*. You may also report misuse of the IRS name, logo, or other IRS property to the Treasury Inspector General for Tax Administration (TIGTA) at 1-800-366-4484. You can forward suspicious emails to the Federal Trade Commission at *spam@uce.gov* or report them at *www.ftc.gov/complaint*. You can contact the FTC at *www.ftc.gov/idtheft* or 877-IDTHEFT (877-438-4338). If you have been the victim of identity theft, see *www.IdentityTheft.gov* and Pub. 5027.

Visit *www.irs.gov/IdentityTheft* to learn more about identity theft and how to reduce your risk.

Privacy Act Notice

Section 6109 of the Internal Revenue Code requires you to provide your correct TIN to persons (including federal agencies) who are required to file information returns with the IRS to report interest, dividends, or certain other income paid to you; mortgage interest you paid; the acquisition or abandonment of secured property; the cancellation of debt; or contributions you made to an IRA, Archer MSA, or HSA. The person collecting this form uses the information on the form to file information returns with the IRS, reporting the above information. Routine uses of this information include giving it to the Department of Justice for civil and criminal litigation and to cities, states, the District of Columbia, and U.S. commonwealths and possessions for use in administering their laws. The information also may be disclosed to other countries under a treaty, to federal and state agencies to enforce civil and criminal laws, or to federal law enforcement and intelligence agencies to combat terrorism. You must provide your TIN whether or not you are required to file a tax return. Under section 3406, payers must generally withhold a percentage of taxable interest, dividend, and certain other payments to a payee who does not give a TIN to the payer. Certain penalties may also apply for providing false or fraudulent information.

Discussion Item S

Island Village Grills

Discussion Item T

Longmeadow playground

Discussion Item U

Security Company Contract

APEX SECURITY AND CONVENTION SERVICES, INC.

AGREEMENT FOR SECURITY SERVICES

This AGREEMENT made this 1ST of April 2024, between APEX SECURITY AND CONVENTION SERVICES, INC., hereinafter called the "Contractor," and CELEBRATION RESIDENTIAL OWNERS ASSOCIATION hereinafter called the "Client"

WITNESSETH:

WHEREAS, the Contractor provides security services.

WHEREAS, the Client desires the Contractor to supply such security services to or for the benefit of the Client:

NOW, THEREFORE, the Client and the Contractor mutually agree as follows:

1. The Contractor shall furnish uniformed personnel to perform security services. The security personnel furnished by Contractor hereunder shall perform all duties in "Schedule A" attached hereto and made part of this Agreement. Such security services shall be performed in accordance with accepted security practices and standards.

2. The Contractor shall furnish uniformed personnel to perform security services at the installation or facilities located at 631 Sycamore St, 951 Spring Park Loop,319 Campus St Celebration FL the "Premises"). The Client represents and warrants that it has full authority to be at and on the Premises at all times during the term of this Agreement and to authorize and allow Contractor to furnish personnel at the Premises to provide the security services set forth in this Agreement.

3. Contractor's security personnel shall be employees of the Contractor, and Contractor shall pay all salaries, social security taxes and all federal and state unemployment insurance and any similar taxes relating to such employees.

4. The Contractor agrees to furnish and keep in full force and effect, during the term of this Agreement, the following: (A) worker's compensation insurance as required by the laws of the State in which the work is to be performed; (B) general liability insurance. Any additional Insurance requirements may be subject to additional fees.

5. The parties affirm that this Agreement hereto contain their entire agreement and that there are no oral agreements or representations binding on the parties hereto.

6. Each of the parties hereto agrees not to hire or employ any present or former employees of the other party hereto, without the prior written consent of the other party, during the time this Agreement is in effect and for a period of one year after the expiration of this

Agreement. In the event the Client engages or hires, either directly or indirectly, any of Contractor's employees during such time period, then for each such event, the Client hereby agrees to pay the Contractor Five Thousand Dollars ($5,000.00) for each person the Client so hires or engages, to help defray the cost the Contractor has incurred in training such employee or personnel. The parties hereby agree and stipulate that this amount represents a reasonable estimation of the damages which would be incurred by Contractor in such situation and does not constitute a penalty.

7. The Client agrees to pay to the Contractor the sum of **$** _26.50___per scheduled hour an $400 per week for company patrol car. Any additional hours scheduled with less than 14 day prior notice will be charged at a sum of time and one half; plus applicable sales tax for each and every hour of time expended by each and every employee of the Contractor in providing the security services under this Agreement; provided, however, that such hourly rates shall be the sum of time and one half the hourly rate plus applicable sales tax on each of the following holidays: Christmas, New Years Eve, New Year's Day, Thanksgiving Day, Labor Day, Memorial Day and Independence Day.

8. Billing is done on a weekly basis and payment is due upon receipt of an invoice. If any sum is not paid by the Client within thirty (30) days of receipt of an invoice, the Client agrees to pay to the Contractor a finance charge of 1 ½ % per month on each and all such unpaid sums from and after its or their due date. Once invoice goes beyond 30 days overdue the Contractor reserves the right to suspended service immediately until account is made current. Client hereby agrees to pay any and all attorneys' fees and court costs incurred by Contractor in recovering unpaid amounts hereunder or in otherwise enforcing or seeking to enforce any of the terms and conditions of this Agreement.

9. This Agreement shall commence on **April 15,2024** and expire **April 16, 2025** Contactor reserves the right to increase the rate set forth in paragraph 7 at anytime. Contractor agrees to notify Client of rate increase within 30 days prior to increase in rate. Upon the expiration of the term of this contract or any renewal term, the contract shall automatically be extended on a month to month basis. Either party shall have the right to terminate the Contract without cause upon a Thirty (30) day written notice.

10. SERVICE CONTRACTOR AGREES THAT THE SERVICES FURNISHED UNDER THIS AGREEMENT SHALL BE IN CONFORMITY WITH PRACTICES WHICH ARE GENERALLY CURRENT IN THE SECURITY INDUSTRY, THE PARTIES AGREE THAT SERVICE CONTRACTOR DOES NOT REPRESENT AND CANNOT WARRANT THAT THE SERVICES FURNISHED WILL PREVENT OR MINIMIZE THE LIKELIHOOD OF LOSS. SERVICE CONTRACTORS RESPONSIBILITY IS SOLELY LIMITED TO PROVIDING PHYSICAL SECURITY SERVICES AND SERVICE CONTRACTOR HAS NOT BEEN ENGAGED AS A CONSULTANT OR OTHERWISE TO PROVIDE AN ASSESSMENT OF SECURITY NEEDS AT THE SITE(S) COVERED.

Client acknowledges and agrees that the Service Contractor is not an insurer and that insurance, in any, covering personal injury and property loss or damage on or to the Client's premises shall

be obtained by the Client; that the Service Contractor is being paid for the security guard services designed to reduce certain risks of loss and that the amounts being charged by the Service Contractor are not related to the value of the property belonging to the Client or others located on the Client's premises and are not sufficient to guarantee that no loss will occur; that the Service Contractor is not assuming responsibility for any losses or damages to property or for personal injury or death, whether directly or indirectly, which may occur, even if due to Service Contractor's negligent performance or failure to perform any obligations under this Agreement. In the event of any loss to property or injury to any person, Client agrees to look exclusively to its insurer to recover for said loss. Client waives all subrogation and other rights of recovery against the Service Contractor that any insurer or other person may have because of paying a claim or loss. Since it is impractical and extremely difficult to determine the actual damages which may arise due to the faulty operation of the services provided, if, notwithstanding the above provision, there should be or arise any liability on the part of the Service Contractor, whether due to the negligence of the Service Contractor or its employees or agents or otherwise, such liability shall be limited to an amount equal to six (6) times the monthly service charges hereunder or two hundred fifty ($250.00) dollars, whichever is less. This sum shall be complete and exclusive and shall be paid and received as agreed upon liquidated damages and not as a penalty. In the event that the Client wishes to increase the maximum amount of such liquidated damages, the Client may, as a matter of right, obtain from the Service Contractor higher limits of liquidated damages by paying an additional amount under a graduated scale of rates relating to the higher limits of liquidated damages. The payment of any additional amounts, however, shall in no way be interpreted to hold the Service Contractor as an insurer. Under no circumstance shall the Service Contractor be liable to Client or any other person for general, special, incidental, or consequential damages of any nature in excess of such amount, including without limitation, damages for personal injury or damages to real or personal property, loss of property or revenue, cost of capital, cost of purchased or replaced goods, other economic loss however occasioned, and whether alleged as caused by the physical security services or the performance or nonperformance of obligations under this Agreement, or breach of warranty or negligence, gross, active, passive, joint, several or otherwise, strict liability, tort, or otherwise by the Service Contractor, its officers, employees, agents, subcontractors, suppliers, affiliates, or representatives. The provisions of this paragraph shall survive the expiration or earlier termination of this Agreement

11. Notwithstanding anything to the contrary in this Agreement, Contractor's personnel shall not be required to undertake, engage in or continue any security services for Client if either prevented from doing so or continuing from doing so, or if the engagement or continuation of such services would likely place any such personnel's safety at risk or in danger, or both, due to any act of God, force majeure or other situation beyond Contractor's control, including, but not limited to, riots, floods, washouts, explosions, fires, hurricanes, storms and any other cause not reasonably within the control of Contractor and which by the exercise of due diligence Contractor is unable, wholly or in part, to prevent or overcome. Physical Security Contractor shall not be liable to client, its officers, directors, employees, agents, guests, invitees or any other third party and, to the fullest extent permitted by law, Client hereby releases Physical Security Contractor, its stockholders, directors, officers, employees and agents for any property loss, economic loss or personal

injury (including death) resulting from Physical Security Contractor's delay in performing or failure to perform any service under this Agreement where such delay or failure is caused, in whole or in part, by any event beyond the reasonable control of the Physical Security Contractor, its employees and agents, including but not limited to any act of God, active shooter incident, pandemic outbreak, flood, windstorm, governmental embargo, quarantine, strike, riot, war or other military action, civil disorder, acts of terrorism, rebellion or revolution, hostile fire, sabotage or governmental seizure

12. Apex Security and Convention Services, Inc. will provide post orders encompassing all responsibilities of Security Officers. Post orders are subject to change at any time deemed necessary. Apex personnel take directives from Apex Management only. Any changes to post orders changing this agreement, schedule, exhibit or written post order procedures must be in writing and accepted per the terms of this agreement and approved by Apex Management.

13. Apex will not be responsible for any misrepresentations by a resident, visitor, guest, or employee as to their name, the purpose of the visit or desire to enter the Premises and any acts performed by the visitors, guest, resident, contractors or employees.

14 It is further agreed that, subject to the terms of this agreement of specific orders, Apex Security reserves the right to control the working hours of and conditions of its personnel and Apex Security is responsible for their safety when working. Therefore all personnel will receive instructions against running errands, personalized services or socializing employees, contractors or other representatives and affiliates while working for Apex Security.

15. Contractor shall have the opportunity on one occasion during the term of this Agreement to negotiate with Client an increase in the rates set forth in Paragraph 7 above if Contractor experiences an increase in its fixed or operating costs as a result of government or third party law, requirement or other similar incident as to which Contractor does not have control. In the event Contractor seeks to exercise this opportunity, and upon written notice to the Client, the parties shall have 20 days to agree to an increase in the rates set forth in Section 7 above for the remainder of the term of the Agreement. Should the parties fail to reach an agreement within such time period, then and in such event Contractor may (but is not required to) at its sole option cancel this Agreement upon 30 days written notice to Client.

IN WITNESS WHEREOF, the parties hereto have executed this Agreement on the day and year first above written.

CLIENT: CELEBRATION RESIDENTIAL OWNERS ASSOCIATION

BY_____

ITS_____

WITNESSED BY: _____

CONTRACTOR: APEX SECURITY AND CONVENTION SERVICES, INC.

BY: _____

ITS: _____

Schedule A:

CLIENT: CELEBRATION RESIDENTIAL OWNERS ASSOCIATION

SITE LOCATION: 631 Sycamore St, 951 Spring Park Loop,319 Campus St Celebration FL

Contract Contact: Niki Patten
Phone : 407-5661200 x 233

DAYS OF THE WEEK	SCHEDULE	TOTAL HOURS
Friday-Sunday	5:00pm-1:00am	24

TOTAL HOURS PER WEEK 24 hours per week

Scheduled hours may vary at clients request, provided that the minimum scheduled hours are no less than 24 per week.

Post Orders set forth in writing and must be agreed to by Apex Management. Approved Post Orders become part of Schedule "A"

Discussion Item V

CCFC Drainage RFP responses

Celebration Soccer Field Modifications - Bid Comparison April 2024

	Bid Price		
LGT Sports	$ 1,295,000.00		
IDA Development	$ 673,726.00		
Medley Sports Construction	$ 543,965.00		
Includes:	**LGT Sports**	**IDA Development**	**Medley Sports Construction**
a. Grubbing	Yes	Yes	Yes
b. Imported Fill	Yes	Yes	Yes
c. Excavation	Yes	Yes	Yes
d. Grading	Yes	Yes	Yes
e. Soil Replacement	Yes	Yes	Yes
f. Underdrains	Yes	Yes	Yes
g. Drainage Piping	Yes	Yes	Yes
h. Drainage Inlets	Yes	Yes	Yes
i. Irrigation Repair	Yes	Yes	Yes*
j. Sodding.	Yes	Yes	Yes
k. As-Built drawings.	No	Yes	Yes
Excludes:			
a. Sales Tax	X		
b. Permit & Inspection Fees	X		
c. Hazardous Disposal	X		
d. Utility Repair	X		
e. Soil Replacement	X		
f. Night/Weekend Work	X		
g. Irrigation Repair/Replacement			X*
h. Tree Work			X
i. Dewatering			X
j. Fence Work			X
k. Survey			X
l. Testing			X
m. Hauling Excess Fill		X	
Footnotes:			
* - Irrigation Repair limited to lateral lines and heads on fileds. No mainline, valves, or wires included.			

MBV ENGINEERING, INC.
MOIA BOWLES VILLAMIZAR & ASSOCIATES

MBV Project No. 23-1068

MBV ENGINEERING, INC.
MOIA BOWLES VILLAMIZAR & ASSOCIATES

Celebration Soccer Fields
Grading & Drainage Modifications

Building Champions
From The Ground Up

Celebration Residential Owners Association

851 Celebration Avenue
Celebration, FL 34747

LTG Sports Turf One, LLC
2240 W Woolbright Road
Suite 411
Boynton Beach, FL 33426

(561) 225-1113
info@landtekgroup.com

Date: 3/28/2024 **Proposal:** 2024-025

Celebration Community Field Complex
Attn: Ms. Lauren Gunnyon
Ms. Niki Patten

851 Celebration Avenue
Celebration, FL 34747

LTG Sports Turf One, LLC. "Contractor" is please to present the following proposal to the Celebration Community "Owner" for the project addressed above.

Celebration Community Field Complex (CCFC) Field Improvements - Proposal #2024-25

Scope of Work: Celebration Community Complex Field (CCFC) Field Improvements

Option #1 – Field Improvements – Natural Grass (*+/- 140,000 SF*)

- Establish erosion control measures
- Strip Sod and Haul Off Site
- Cut Field to Subgrade and Remove Haul of Material Offsite
- Stockpile 25% of Existing Material On Site
- Install 1" x 12" Flat Pipe
- Install Loop Train Consisting of 8" and 12" Perforated HDPE
- Tie into Existing Drainage System in 3 Locations
- Modify existing irrigation system
- Install Approximately 10" of Sand
- Install Existing Soil Material on top of Sand and Rototill
- Laser grade receiving surface and prep for sod installation
- Install Celebration Bermuda sod
- Roll playing field in two (2) different directions and infill any seams to provide for a consistent playing surface
- Provide topographic survey of playing surface

Natural Grass Field Improvement Cost: $1,295,000.00

Total Project Cost: $1,295,000.00

The estimated total cost for this proposal one million two hundred ninety five thousand.

Please feel free to reach out to any member of our project team with questions about this proposal:

Wes Hardin
Account Manager
The LandTek Group, Inc.
786-423-5735
whardin@LTGSportsTurfOne.com.com

Thank you again for your interest in LandTek, we look forward to working with you.

The present proposal serves to provide an overview of the terms and conditions governing the business relationship between the parties for the completion of the above-referenced transaction. The parties hereby undertake to subsequently formalize their agreement by signing a more detailed agreement and/or purchase order ("Contract") and as such the amount listed herein shall be an estimate which will be formalized in said Contract.

By its signature(s) below, the customer acknowledges having read and accepted this proposal and undertakes to be bound by it.

X _____

Owner (Signature)

Any PO or Contract must be made out to LTG Sports Turf One, LLC.
2240 W Woolbright Road, Suite 411
Boynton Beach, FL 33426

Exclusions:

- Sales Tax
- Permits and Inspection Fees
- Architectural and Engineering Fees
- Removal & Disposal of Contaminated, Impacted, or Hazardous material not meeting requirements for clean fill
- Removal & relocation of utilities
- Pricing Includes an Allowance for Irrigation
- Hazardous Material/Asbestos Abatement
- Nighttime or weekend work is not figured within our cost proposal.

Terms & Conditions:

The following provisions shall serve as the basis of an agreement between "Contractor" and "Owner" in connection with the supply and installation of products and services in accordance with the present cooperative purchasing proposal:

a) Pricing is valid for 30 days

b) Pricing is based off private wages

c) Delays and cost increases of raw materials and/or labor due to disrupted supply chains and fluctuation in market conditions may occur.

d) This bid proposal and its acceptance is subject to strikes, accidents, delays beyond our control and *force majeure*.

e) "Contractor" shall not be a party to any penalty clauses and/or liquidated damages provisions.

f) The parties acknowledge and agree that Contractor shall not be entitled to seek or obtain any increase in the proposal sum unless changes are approved by "Owner". If there are any changes in proposal scope, memorialized in approved Change Orders, that require additional supplies, materials or equipment, the cost associated with these items will be additional to the proposal.

g) A material deposit may be required to hold pricing for an extended period of time. This item will be discussed during the creation of a contractual agreement.

h) Progress Payments: Based upon Applications for Payment submitted to the Owner by the Contractor and Certificates for Payment issued by the Owner, the Owner shall make progress payments on account of the Contract Sum.

i) The period covered by each Application for Payment shall be one calendar month ending on the last day of the month.

j) Each Application for Payment shall be based on the most recent schedule of values submitted by the Contractor.

k) In the event that "Contractor" pursues the collection of payment of any past-due invoice, "Contractor" shall have the right to recover all charges and expenses, including attorney fees, related with the collection operations.

l) **Confidential Information**. In the performance of this agreement, employees of each party may receive confidential information and materials of the other ("Confidential Information"). Confidential Information includes (i) either party's business or financial information and plans; (ii) the price, scope, terms and existence of this Agreement or any agreement between LandTek and its customers; (iii) any other items identified as being confidential by either party. Confidential Information will not include information that the receiving party can show: (a) is or becomes publicly known or available through no fault of the receiving party; (b) was in its possession prior to receipt from the disclosing party, as evidenced by business records; (c) was lawfully obtained from a third party who has the right to make such disclosure; (d) is independently developed as can be shown by documentation; or (e) is produced in compliance with applicable law or a court order, provided the receiving party first gives the disclosing party reasonable notice of such law or order. Both parties agree for themselves, and their employees that such information will be kept confidential, using the same degree of care that each party uses to protect its own confidential information, and not disclosed to third parties

Relevant Experience
Natural Grass Field Improvments

Building Champions From The Ground Up

Celebration Residential Owners Association

851 Celebration Avenue
Celebration, FL 34747

LTG Sports Turf One, LLC
2240 W Woolbright Road
Suite 411
Boynton Beach, FL 33426

(561) 225-1113
info@landtekgroup.com

PROFESSIONAL SOCCER

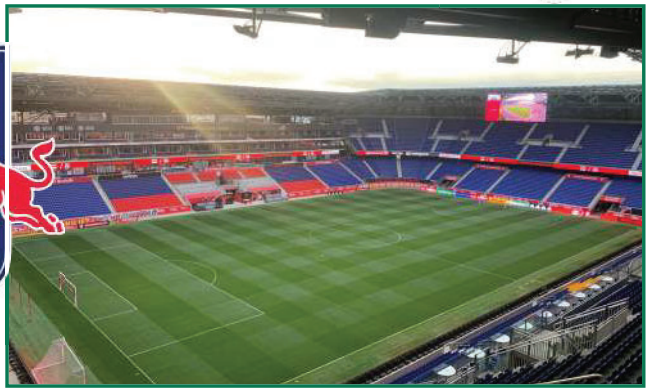

LANDTEK GROUP, INC.

105 SWEENEYDALE AVE. | BAY SHORE | NY 11706 | 631.691.2381 | LANDTEKGROUP.COM

DRV PNK Stadium and Training Grounds

Fort Lauderdale, FL

Earthwork, Excavation, and Base Work
Compressed Timeline
Six (6) Natural Grass Pitches and One
(1) Synthetic Turf Pitch

is project was a fast-paced design build
ofessional soccer training facility for the new
LS expansion team, Inter Miami CF. LandTek
s asked to be part of the project team to assist in the monumental task of building a high-end stadium and training facility over a 60-acre complex in 12 months. The project was successfully completed and has been in use since March of 2020. This project started with our involvement in the design of the fields which included elevational constraints, specialized drainage, underground infrastructure requirements, work around multiple contractors and the ability to phase aspects of each task. The design included four (4) natural grass pitches for academy teams, two (2) professional pitches, a synthetic pitch and the stadium pitch.

After our design was incorporated into the project drawings, we began to coordinate our activities with team ownership and the CM/GC (Moss) hired to oversee the project. The pitches were surrounded by concrete walkways, landscaping, and site infrastructure. Additionally, LTG was responsible for coordinating all activities that interfaced with field construction. The installation of specialized underdrain systems, growing media, irrigation systems and laser grading commenced. Each task was planned to sequence with the surrounding work which made the logistical planning very important. The natural grass pitches needed to be constructed while the stadium and team spaces were erected around them. This was required because the grass needs the ability to develop a root structure for performance and safety. The installation of these fields is typically at the backend of a project of this scale but due to the timeline this work needed to run concurrently. During the process, we were tasked with the installation of customized netting systems and sports lighting. We completed the installation of the pitches, the synthetic turf field and surrounding sports related infrastructure. We were also responsible for the development and maintenance of the natural grass fields which required the utilization of temporary systems until the complex was finalized. Our ability to import the required trained workforce from our other work regions allowed us to complete this complex project ahead of schedule.

Baptist Health Training Complex

Miami Gardens, FL

- Earthwork, Excavation, and Base Work
- SubAir System
- New Drainage System
- 60’ Ball Stop Netting System

cated next to the Hard Rock Stadium in Miami rdens, Florida, the Baptist Health Training nter is the new practice home for the Miami lphins. The facility has a new high-tech SubAir system installed by LTG Sports Turf One. LTG Sports Turf One performed all earthwork, drainage and base work at the new training complex including the installation of a synthetic turf border and new 60’ netting systems.

Florida International University

Miami, FL

With a strong relationship with Florida International University in Miami, LTG Sports Turf One was involved in the construction of multiple fields throughout the FIU campus. These new fields included synthetic turf and natural turf intramural fields, synthetic and natural turf practice football fields, and a new professional synthetic turf soccer stadium. After the sports field construction was completed, LTG Sports Turf One was also contracted to maintain the synthetic and natural turf fields throughout the year, maximizing playability.

PROJECT HIGHLIGHTS

- Natural Grass Construction
- Synthetic Turf Construction
- New Drainage System

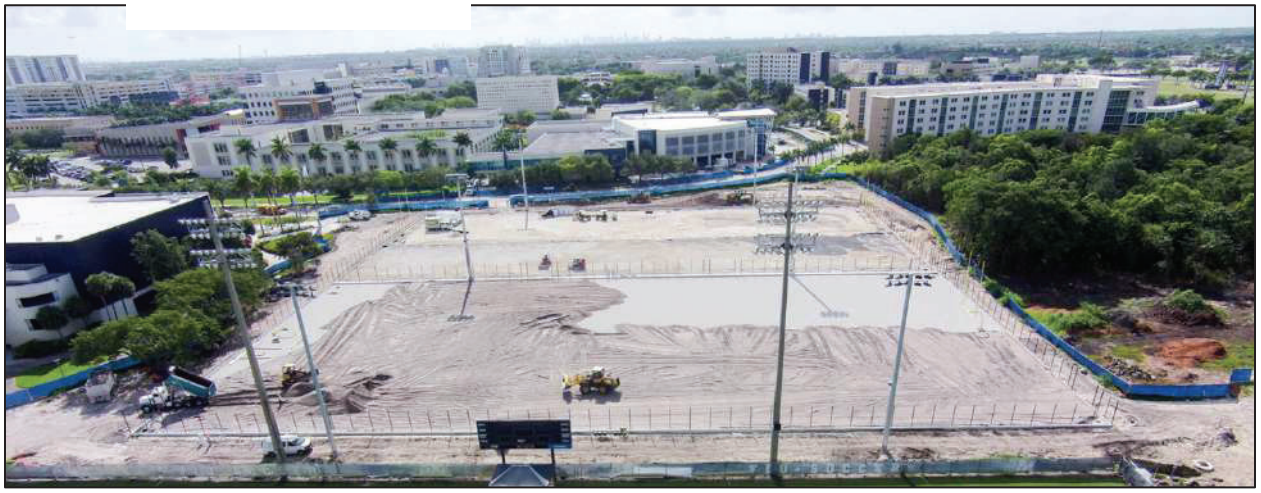

Florida Atlantic University

Boca Raton, FL

Natural Grass Field Construction
Subsurface Underdrain System

mpleted in the fall of 2011, FAU Stadium in ca Raton was noted for being one of the first rpose built collegiate stadiums in South rida. Sports Turf One played a key role in the on-time delivery of the stadium. Our team developed a custom drainage system while coordinating with other trades of stadium construction to deliver a world-class product on time and on budget.

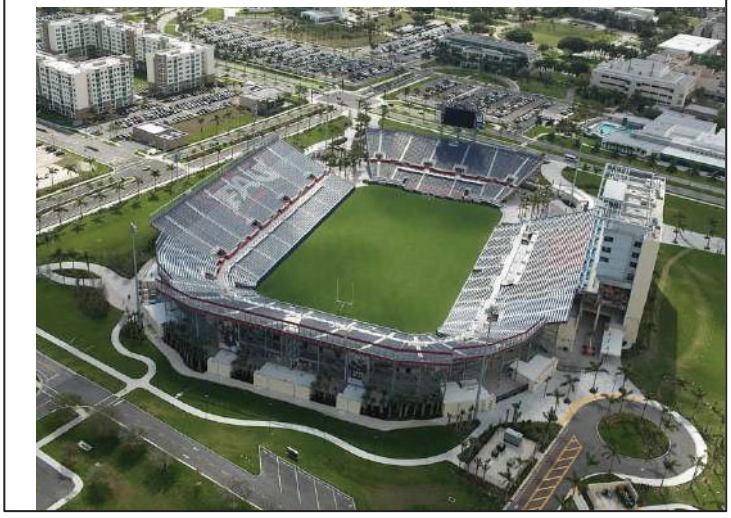

Testimonials

May 22, 2023

To Whom It May Concern,

I would like to take this opportunity to acknowledge the fantastic work and professional service I experienced working with LTG Sports Turf One. The Inter Miami/Lockhart project was a massive undertaking to build a 30-acre site with a natural grass stadium, 6 training fields and an artificial turf field. All LTG's work was done at a high standard, and I always felt we were in great hands. The large scale of what we were building combined with the aggressive timeframe made it extremely challenging. Everything from design, drainage, rootzone, irrigation, grass quality and maintenance was fantastic. Their knowledge on all subject matters, really put my mind at ease and I knew we were in good hands. Their employees are dedicated, great people and they perform high-quality craftsmanship. The service didn't stop after construction was completed. If we require assistance or need information regarding work performed or future planning, they have always been helpful and responsive. I look forward to continuing to work with LTG Sports Turf One, especially on future projects.

Matt Bruderek
Director Turf & Grounds, Inter Miami CF

May 22, 2023

To Whom It May Concern,

I am pleased to write this letter on behalf of Millennium Sports Technologies, Inc. a Sports Field Design and Consulting company, specializing in the design of professional and collegiate athletic fields throughout North America and abroad.

Over the past 20 + years we have had the pleasure of working with LTG Sports Turf One, LLC and the Landtek Group to construct a number of high-performance athletic fields (both natural and synthetic turf) in numerous locations in throughout Florida and the eastern seaboard of the USA. We have found that their work is exemplary, performed to the highest standards, is always timely and within the set budget parameters.

We have found that when challenges arise on any project, they offer creative solutions to keep the project moving forward, which is extremely important given our client base and the expectation of excellence demanded. We rely on their field expertise to implement the most challenging of projects under difficult circumstances and can appreciate the time and effort that they put forth to bring our projects to fruition.

LTG Sports Turf One is an industry leader, and we always look forward to working with them. I can highly recommend them for your project, as their pursuit of excellence is unparalleled in our industry.

Sincerely,

MILLENNIUM SPORTS TECHNOLOGIES, INC.

Daniel Almond

Daniel R Almond, President

Sports Field Design Consultant

CITY OF BOYNTON BEACH
PUBLIC WORKS DEPARTMENT
ENGINEERING DIVISION

P.O. Box 310
Boynton Beach, Fl. 33425-0310
Phone: (561) 742-6244
www.boynton-beach.org

5 June 2023

To Whom It May Concern,

It gives me profound pleasure to write this letter on behalf of an organization that is providing The City of Boynton Beach with an outstanding product and dedicated service.

Currently, the City of Boynton Beach is utilizing LTG Sports Turf One, LLC to install a new field turf surface on our Ezell Hester Park football field and park renovation project consisting of new a new grandstand, bleachers, shade systems, parking areas, landscaping and site amenities. Their proposals have always been competitive within industry standards; however, their attention to detail and ability to work within time constraints puts them in a league by themselves. They have always come within budget and have been great to work with on this project.

Whenever we require feedback, assistance or information regarding work performed or future planning they have always been amenable and responsive. They are an outstanding organization with dedicated employees and high-quality craftsmanship.

LTG Sports Turf One is an industry leader. Our student-athletes will benefit because of their outstanding attention to detail for participant welfare. I look forward to working with LTG Sports Turf One, LLC on future projects.

Sincerely,

Carl Frumenti

Project Manager III

BURKHARDT
CONSTRUCTION, INC.

Vincent G. Burkhardt
President

June 21, 2021

Letter of Recommendation

To Whom It May Concern,

I am writing to recommend that LTG Sports Turf One be considered for future construction services with prospective clients. I have had the pleasure of working directly with LTG on various projects throughout the years, the most recent being a natural baseball field renovation for the Village of Wellington at Village Park. The scope of work included natural turf improvements, a full drainage and irrigation system, new athletic field equipment, and a new fencing system.

LTG Sports Turf consistently demonstrated their knowledge and professionalism throughout the project, paying close attention to the quality of their work while making sure the job was completed on time and within budget. As they have on similar projects in the past, LTG exceeded our expectations and delivered a superior product.

I highly recommend working with LTG Sports Turf One for any of your construction needs and I look forward to working with them again in the future.

Sincerely,

Anthony M Sabatino

Anthony M. Sabatino
Senior Project Manager
Burkhardt Construction, Inc.

KAUFMAN LYNN CONSTRUCTION

3185 South Congress Avenue
Delray Beach, FL 33445
o 561.361.6700 | f 561.361.6979
www.kaufmanlynn.com
CCC 021732

Letter of Recommendation

To Whom It May Concern,

I am writing to recommend that LTG Sports Turf One be considered for future construction services with prospective clients. I have had the pleasure of working directly with LTG on numerous projects throughout the years, the most recent being the new stadium and super pitch fields at Wellington High School in Wellington, Florida. The scope of work included a new natural stadium field, four synthetic super pitch fields, a new running track, full drainage systems, and new athletic field equipment.

LTG Sports Turf consistently demonstrated their knowledge and professionalism throughout the project, paying close attention to the quality of their work while making sure the job was completed on time and within budget. As they have on similar projects in the past, LTG exceeded our expectations and delivered a superior product.

I highly recommend working with LTG Sports Turf One for any of your construction needs and I look forward to working with them again in the future.

Sincerely,

Jon Tori
Vice President, Operations

THE PARKER COMPANY

15 December 2020

Mr. Mike Ryan, President
The LandTek Group
105 Sweeneydale Avenue
Bay Shore, NY 11707

Letter of Commendation – On Behalf of Inter Miami CF & The Parker Company

Dear Mike,

As the Inter Miami CF Stadium and Training Facility development project comes to an end, I am writing with the thankful support of Paul McDonough, COO & Sporting Director of the team, to commend you and the entire LandTek Group for the excellent work done.

In summary, LandTek / Sports Turf One, planned and constructed a turnkey soccer complex consisting of 6 natural grass full FIFA soccer pitches complete with netting and lights; a Fieldturf synthetic turf lighted field for soccer and football; and the stadium pitch (natural grass with a Fieldturf border). The Stadium also required of you a "front door" installation of synthetic landscape turf to provide a robust pre-game entertainment fan zone prior to spectator entry into the stadium.

Over 1-million square feet of work was installed, as well as your assistance in creating/perfecting the water well systems throughout the 32 acre site.

The approximately $11 million contract of work was executed on time – starting in October 2019 and finished before the inaugural MLS season in mid-March 2020. Your team built these fields in under six months – a near impossible goal set by Inter Miami CF.

Quite honestly, The LandTek Group is the only firm of its kind that we had full faith and confidence could actually meet our deadlines and with the quality we now enjoy.

As the fields matured with the aid of your experts Bill Gillan and David Livingston – we believe and have been told this collection of MLS fields are without a doubt the finest soccer fields in the USA. This was also confirmed by the US Men's National Team coach several days ago as the USA trains and then plays El Salvador in an international friendly.

Special mention regarding your COO, John Sulinski must be made. He directed every aspect of the project with a calm/cool professionalism and was always available to meet or speak on any topic or issue. We cannot thank John enough for his dedication to make this project what it has become – the very best!

I am asserting here that anytime I can personally provide a recommendation for LandTek to any future clients – please feel free to call on me as well as to use this letter of commendation as it benefits your firm. It's the least we can do.

Cheers,

DLockerbie
Donald Lockerbie
Managing Director, Sports & Events

GLOBAL HOSPITALITY & SPORTS PROCUREMENT
MIAMI • LONDON • DUBAI • ZURICH

6205 BLUE LAGOON DRIVE, SUITE 300, MIAMI, FLORIDA 33126 USA TEL: 305.421.6900 FAX: 305.421.6959 WWW.PARKERINTERNATIONAL.COM

THE VILLAGE OF WELLINGTON

A GREAT HOMETOWN

Council
Anne Gerwig, Mayor
Michael J. Napoleone, Vice Mayor
John T. McGovern, Councilman
Michael Drahos, Councilman
Tanya Siskind, Councilwoman

Manager
Jim Barnes

To Whom It May Concern,

It gives me profound pleasure to write this letter on behalf of an organization that has provided The Village of Wellington with an outstanding product and dedicated service.

Over the past ten years we have utilized LTG Sports Turf One, LLC to install a new field turf surface on our Wellington High School Fields, AKA: Greenview Shores Park. As well they built Baseball Field 21 at Village Park, and Multipurpose Fields 6 and 7. Their proposals have always been competitive within industry standards; however, their attention to detail and ability to work within time constraints puts them in a league by themselves. They have always come within budget and on two occasions come under budget.

Whenever we require feedback, assistance or information regarding work performed or future planning they have always been amenable and responsive. They are an outstanding organization with dedicated employees and high-quality craftsmanship. LTG Sports Turf One is bar none, the best contractor to deal with!

LTG Sports Turf One is an industry leader. Our student-athletes have benefited because of their outstanding attention to detail for participant welfare. I look forward to working with LTG Sports Turf One, LLC on future Projects.

Sincerely,

Bruce Wagner

Bruce Wagner
Public Works Director | Village of Wellington
14001 Pierson Rd | Wellington FL 33414
561.791.4730 | bwagner@wellingtonfl.gov

March 29, 2022

Dear Bill,

I would like to thank The Landtek Group for the excellent work you and your team did for San Diego Wave FC. We have World Champions and Olympic Medalists on our team, and our players frequently comment on the professional environment they come to work at every day. We have the finest training fields in the NWSL and every visiting team has commented on our training environment.

The care and professionalism Landtek provided during design and installation was exceptional, and if we can ever serve as a reference to other organizations, please do not hesitate to ask. Thanks again for creating a world class home for our players and coaches.

Sincerely,

Jill Ellis
President, SD Wave FC

CELEBRATION SOCCER FIELDS

Grading and Drainage Modifications

PROJECT MANUAL

February 2024

PREPARED FOR

CELEBRATION RESIDENTIAL OWNERS ASSOCIATION
851 Celebration Ave.
Celebration, FL 34747
(407) 566-1200

PREPARED BY

MBV ENGINEERING, INC.
MOIA BOWLES VILLAMIZAR & ASSOCIATES

MBV ENGINEERING, INC.
1250 W. Eau Gallie Blvd., Unit H
Melbourne, FL 32935
(321) 253-1510

Bid Document

MBV PROJECT NUMBER: 23-1068

CELEBRATION SOCCER FIELDS

Grading and Drainage Modifications

PROJECT MANUAL

TABLE OF CONTENTS

SECTION	SECTION TITLE	TOTAL PAGES
1	Invitation to Bidders	1
2	Instruction to Bidders	3
3	General Conditions	56
4	Supplementary Conditions	9
5	General Requirements	4
6	Contractor's Qualification Statement	2
7	Standard Agreement	10
8	Bid Sheet	2
9	Application for Payment	1

MBV ENGINEERING, INC.

SECTION 1

INVITATION TO BID

SECTION 1

INVITATION TO BID

Bids shall be submitted in a sealed envelope, marked "Celebration Soccer Fields - Grading and Drainage Modifications" to the following:

Celebration Residential Owners Association
851 Celebration Ave.
Celebration, FL 34747
Attn. : Ms. Lauren Gunnyon, Manager

Contract bids for this project shall be due by **2:00 p.m. on Thursday, March 28, 2024**, attached to this book, and then opened at a meeting for that effect.

An on-site inspection may be conducted by the Contractor at their own discretion. No inspections shall be conducted without an appointment thru MBV Engineering, Inc. or the CROA Manager.

This CONTRACT is a LUMP SUM CONTRACT for the work described herein and shall be based on unit prices for specific items, which will either be added or deducted from the LUMP SUM CONTRACT PRICE.

The successful bidder who is awarded the contract to perform the work shall be required to furnish construction performance bond in the full amount of the BID prior to commencing work. A pre-construction meeting with the successful bidder will be held at the CROA office at a date and time to be determined.

All questions concerning the work to be performed or any other item contained in the contract documents shall be directed to the office of the project engineer, being MBV ENGINEERING, Inc., 1250 W. Eau Gallie Blvd., Unit H, Melbourne, FL 32935.

The ENGINEER reserves the right to reject any or all BIDS, to waive informalities, and re-bid the work.

SECTION 2

INSTRUCTION TO BIDDERS

SECTION 2
INSTRUCTION TO BIDDERS FOR THE CELEBRATION SOCCER FIELDS - GRADING AND DRAINAGE MODIFICATIONS

SCOPE OF WORK: Work shall include the regrading and drainage improvements to the two existing soccer fields located at 319 Campus St., Celebration, FL 34747. Areas of work shall include, as applicable, grubbing, fill, excavation, grading, soil replacement, underdrains, piping, inlets, irrigation repair, sodding, and as-built drawings. All work performed under this scope of work shall be in accordance with the SPECIFICATIONS and CONTRACT DOCUMENTS.

CONTRACT BIDDING: The bid shall be submitted in a lump sum form, which shall include unit prices for each item of repair and shall follow the criteria as outlined in the CONTRACT DOCUMENTS and are as follows:

a. Grubbing
b. Imported Fill
c. Excavation
d. Grading
e. Soil Replacement
f. Underdrains
g. Drainage Piping
h. Drainage Inlets
i. Irrigation Repair
j. Sodding.
k. As-Built drawings.

BIDDER'S QUALIFICATIONS: To demonstrate qualifications to perform the work, each BIDDER must be prepared to submit, within five days of the ENGINEER'S request evidence such as licenses, insurance coverage, previous experience, present commitments, and up-to-date recommendations from other work and other such data which may be requested by the ENGINEER.

EXAMINATION OF CONTRACT DOCUMENTS AND SITE: It is the responsibility of each BIDDER before submitting a BID, to (a) examine the CONTRACT DOCUMENTS thoroughly, (b) visit the site to become familiar with all local conditions that may affect cost, progress, performance or furnishing of the work, (c) consider federal, state and local laws and regulations that may affect cost, progress, performance or furnishing of the work, (d) study and carefully correlate BIDDER'S observations with the

CONTRACT DOCUMENTS, and (e) notify the ENGINEER of all conflicts, errors or discrepancies in the CONTRACT DOCUMENTS which might result in additional costs to the OWNER.

INTERPRETATIONS AND ADDENDA: Questions about the meaning or intent of the CONTRACT DOCUMENTS are to be directed to the ENGINEER. Interpretations or clarifications considered necessary by the ENGINEER in response to such questions will be issued by addenda.

Only questions answered by formal written addenda will be binding. Oral and other interpretations or clarifications will be without legal effect. ENGINEER may also issue addenda to modify the BIDDING DOCUMENTS as deemed advisable.

CONTRACT TIME: The number of calendar days within which, or the dates by which, the WORK is to be substantially completed and also completed and ready for final payment (the contract time) are set forth in the AGREEMENT. If the contract times are not outlined or included, the time for substantial completion is to be set forth by BIDDER in the BID and will be included in the agreement. The times will be taken into consideration by the ENGINEER during the evaluation of the BIDS, and it will be necessary for the successful BIDDER to satisfy the ENGINEER of the BIDDER'S ability to achieve substantial completion and final completion within the times designated in the BID.

APPLICABLE CODES: Recommendations and requirements of the following entities shall govern all work, workmanship and materials as they apply, as follows:

AASHTO – American Association State Highway and Transportation Officials
ASTM - American Society of Testing Materials

SUBSTITUTE OR "OR-EQUAL" ITEMS: The CONTRACT, if awarded, will be on the basis of materials and equipment described in the drawings and specified in the specifications without consideration of possible substitute or "or-equal" items. Whenever it is indicated in the specifications that a substitute or "or-equal" item of material or equipment may be furnished or used by the CONTRACTOR if acceptable to the ENGINEER, application for each acceptance will not be considered by the ENGINEER until after the effective date of the AGREEMENT. The procedure for submission of any such application by the CONTRACTOR and the consideration by the ENGINEER is set forth in the general conditions.

SUBCONTRACTORS, SUPPLIERS AND OTHERS: If the specifications require (or if the ENGINEER requests after the BIDS are received) the identity of certain SUBCONTRACTORS, SUPPLIERS, and other persons and organizations (including those who are to furnish the principle items of materials and equipment) to be submitted to the ENGINEER in advance of the specified date prior to the said AGREEMENT, submit to the ENGINEER a list of all such SUBCONTRACTORS, SUPPLIERS and other persons and organizations proposed for those portions of the WORK for which such identification is required. Such list shall be accompanied by an experience statement with pertinent information regarding similar projects and other qualifications for each such SUBCONTRACTOR, SUPPLIER, person or organization if requested by the ENGINEER. SUBCONTRACTORS shall be required to meet the CONTRACTOR'S liability insurance requirements as established by the GENERAL AND SUPPLEMENTARY CONDITIONS. If the ENGINEER after due investigation has reasonable objection to any proposed SUBCONTRACTOR and SUPPLIER, either may, before the Notice of Award is given, request the apparent SUCCESSFUL BIDDER to submit an acceptable substitute with increase in the BID PRICE.

If apparent SUCCESSFUL BIDDER declines to make any such substitution, the ENGINEER may award the contract to the next lowest BIDDER that proposed to use acceptable SUBCONTRACTORS, SUPPLIERS and other persons and organizations.

No CONTRACTOR shall be required to employ any SUBCONTRACTOR, SUPPLIER, other person or organization against whom the CONTRACTOR has reasonable objection.

SUBMISSION OF BIDS: BIDS shall be submitted at the time, date and place indicated in the ADVERTISEMENT or INVITATION TO BID and shall be in a sealed envelope, marked with the PROJECT TITLE. The name and address of the BIDDER shall be included on the BIDDER'S FORMS and shall be delivered to the PROJECT MANAGER'S office via hand delivery, messenger or mail.

AWARD OF CONTRACT: The ENGINEER reserves the right to reject any and all BIDS, to waive any and all informalities not involving price, time or change in the work and to negotiate contract terms with

the SUCCESSFUL BIDDER, and the right to disregard all nonconforming, non-responsive, unbalanced or conditional bids. The ENGINEER also reserves the right to reject the Bid if not responsive or the BIDDER is unqualified or of doubtful financial ability or fails to meet any other pertinent standard or criteria established by the ENGINEER. Additionally, the ENGINEER reserves the right to break up the individual components of each SUBMITTED BID. In evaluating the BIDS, the ENGINEER will consider the qualifications of the BIDDERS, whether or not the BIDS comply with the prescribed requirements, and such alternatives, unit prices and other data.

It is the desire of the ENGINEER that the project be divided into two responsibilities. Items A through G per the above Section 2 CONTRACT BIDDING are to be performed by either the SUBCONTRACTOR or PRIME CONTRACTOR and Items H through L by the CONTRACTOR not performing the previous items. The designation of PRIME or SUB shall be defined by the BIDDERS. No overlapping of duties is desired.

SECTION 3

GENERAL CONDITIONS

This document has important legal consequences; consultation with an attorney is encouraged with respect to its use or modification. This document should be adapted to the particular circumstances of the contemplated Project and the Controlling Law.

STANDARD GENERAL CONDITIONS OF THE CONSTRUCTION CONTRACT

Prepared by

ENGINEERS JOINT CONTRACT DOCUMENTS COMMITTEE

and

Issued and Published Jointly By

ACEC

National Society of Professional Engineers
Professional Engineers in Private Practice

ASCE American Society of Civil Engineers

PROFESSIONAL ENGINEERS IN PRIVATE PRACTICE
a practice division of the
NATIONAL SOCIETY OF PROFESSIONAL ENGINEERS

AMERICAN CONSULTING ENGINEERS COUNCIL

AMERICAN SOCIETY OF CIVIL ENGINEERS

This document has been approved and endorsed by

The Associated General Contractors of America

and the

Construction Specification Institute

Knowledge for Creating and Sustaining the Built Environment

EJCDC C-700 Standard General Conditions of the Construction Contracts
Copyright © 2002 National Society of Professional Engineers for EJCDC. All rights reserved.

These General Conditions have been prepared for use with the Suggested Forms of Agreement Between Owner and Contractor (Nos. C-520 or C-525, 2002 Editions). Their provisions are interrelated and a change in one may necessitate a change in the other. Comments concerning their usage are contained in the EJCDC Construction Documents, General and Instructions (No. C-001, 2002 Edition). For guidance in the preparation of Supplementary Conditions, see Guide to the Preparation of Supplementary Conditions (No. C-800, 2002 Edition).

Copyright © 2002 National Society of Professional Engineers
1420 King Street, Alexandria, VA 22314-2794
(703) 684-2882

American Consulting Engineers Council
1015 15th Street N.W., Washington, DC 20005
(202) 347-7474

American Society of Civil Engineers
1801 Alexander Bell Drive, Reston, VA 20191-4400
(800) 548-2723

Copyright © 2002 National Society of Professional Engineers for EJCDC. All rights reserved.

TABLE OF CONTENTS

Page

Article 1 – Definitions and Terminology 1
1.01 Defined Terms 1
1.02 Terminology 4

Article 2 – Preliminary Matters 5
2.01 Delivery of Bonds and Evidence of Insurance 5
2.02 Copies of Documents 5
2.03 Commencement of Contract Times; Notice to Proceed 6
2.04 Starting the Work 6
2.05 Before Starting Construction 6
2.06 Preconstruction Conference 6
2.07 Initial Acceptance of Schedules 6

Article 3 – Contract Documents: Intent, Amending, Reuse 7
3.01 Intent 7
3.02 Reference Standards 7
3.03 Reporting and Resolving Discrepancies 7
3.04 Amending and Supplementing Contract Documents 8
3.05 Reuse of Documents 8
3.06 Electronic Data 8

Article 4 – Availability of Lands; Subsurface and Physical Conditions; Hazardous Environmental Conditions; Reference Points 9
4.01 Availability of Lands 9
4.02 Subsurface and Physical Conditions 9
4.03 Differing Subsurface or Physical Conditions 10
4.04 Underground Facilities 11
4.05 Reference Points 11
4.06 Hazardous Environmental Condition at Site 12

Article 5 – Bonds and Insurance 13
5.01 Performance, Payment, and Other Bonds 13
5.02 Licensed Sureties and Insurers 13
5.03 Certificates of Insurance 14
5.04 Contractor's Liability Insurance 14
5.05 Owner's Liability Insurance 15
5.06 Property Insurance 15
5.07 Waiver of Rights 16
5.08 Receipt and Application of Insurance Proceeds 17
5.09 Acceptance of Bonds and Insurance; Option to Replace 17
5.10 Partial Utilization, Acknowledgment of Property Insurer 17

Article 6 – Contractor's Responsibilities 18
6.01 Supervision and Superintendence 18
6.02 Labor; Working Hours 18
6.03 Services, Materials, and Equipment 18
6.04 Progress Schedule 18
6.05 Substitutes and "Or-Equals" 19
6.06 Concerning Subcontractors, Suppliers, and Others 21
6.07 Patent Fees and Royalties 22

Copyright © 2002 National Society of Professional Engineers for EJCDC. All rights reserved.

6.08 Permits 22
6.09 Laws and Regulations 22
6.10 Taxes 22
6.11 Use of Site and Other Areas 23
6.12 Record Documents 23
6.13 Safety and Protection 23
6.14 Safety Representative 24
6.15 Hazard Communication Programs 24
6.16 Emergencies 24
6.17 Shop Drawings and Samples 24
6.18 Continuing the Work 26
6.19 Contractor's General Warranty and Guarantee 26
6.20 Indemnification 27
6.21 Delegation of Professional Design Services 27

Article 7 – Other Work at the Site 28
7.01 Related Work at Site 28
7.02 Coordination 28
7.03 Legal Relationships 29

Article 8 – Owner's Responsibilities 29
8.01 Communications to Contractor 29
8.02 Replacement of Engineer 29
8.03 Furnish Data 29
8.04 Pay When Due 29
8.05 Lands and Easements; Reports and Tests 29
8.06 Insurance 29
8.07 Change Orders 29
8.08 Inspections, Tests, and Approvals 29
8.09 Limitations on Owner's Responsibilities 30
8.10 Undisclosed Hazardous Environmental Condition 30
8.11 Evidence of Financial Arrangements 30

Article 9 – Engineer's Status During Construction 30
9.01 Owner's Representative 30
9.02 Visits to Site 30
9.03 Project Representative 30
9.04 Authorized Variations in Work 31
9.05 Rejecting Defective Work 31
9.06 Shop Drawings, Change Orders and Payments 31
9.07 Determinations for Unit Price Work 31
9.08 Decisions on Requirements of Contract Documents and Acceptability of Work 31
9.09 Limitations on Engineer's Authority and Responsibilities 32

Article 10 – Changes in the Work; Claims 32
10.01 Authorized Changes in the Work 32
10.02 Unauthorized Changes in the Work 32
10.03 Execution of Change Orders 33
10.04 Notification to Surety 33
10.05 Claims 33

Article 11 – Cost of the Work; Allowances; Unit Price Work 34
11.01 Cost of the Work 34
11.02 Allowances 36

Copyright © 2002 National Society of Professional Engineers for EJCDC. All rights reserved.

11.03 Unit Price Work 36

Article 12 – Change of Contract Price; Change of Contract Times 37
12.01 Change of Contract Price 37
12.02 Change of Contract Times 38
12.03 Delays 38

Article 13 – Tests and Inspections; Correction, Removal or Acceptance of Defective Work 39
13.01 Notice of Defects 39
13.02 Access to Work 39
13.03 Tests and Inspections 39
13.04 Uncovering Work 39
13.05 Owner May Stop the Work 40
13.06 Correction or Removal of Defective Work 40
13.07 Correction Period 40
13.08 Acceptance of Defective Work 41
13.09 Owner May Correct Defective Work 41

Article 14 – Payments to Contractor and Completion 42
14.01 Schedule of Values 42
14.02 Progress Payments 42
14.03 Contractor's Warranty of Title 44
14.04 Substantial Completion 44
14.05 Partial Utilization 45
14.06 Final Inspection 45
14.07 Final Payment 46
14.08 Final Completion Delayed 46
14.09 Waiver of Claims 47

Article 15 – Suspension of Work and Termination 47
15.01 Owner May Suspend Work 47
15.02 Owner May Terminate for Cause 47
15.03 Owner May Terminate For Convenience 48
15.04 Contractor May Stop Work or Terminate 48

Article 16 – Dispute Resolution 49
16.01 Methods and Procedures 49

Article 17 – Miscellaneous 49
17.01 Giving Notice 49
17.02 Computation of Times 49
17.03 Cumulative Remedies 50
17.04 Survival of Obligations 50
17.05 Controlling Law 50
17.06 Headings 50

Copyright © 2002 National Society of Professional Engineers for EJCDC. All rights reserved.

GENERAL CONDITIONS

ARTICLE 1 – DEFINITIONS AND TERMINOLOGY

1.01 *Defined Terms*

A. Wherever used in the Bidding Requirements or Contract Documents and printed with initial capital letters, the terms listed below will have the meanings indicated which are applicable to both the singular and plural thereof. In addition to terms specifically defined, terms with initial capital letters in the Contract Documents include references to identified articles and paragraphs, and the titles of other documents or forms.

1. *Addenda* – Written or graphic instruments issued prior to the opening of Bids which clarify, correct, or change the Bidding Requirements or the proposed Contract Documents.

2. *Agreement* – The written instrument which is evidence of the agreement between Owner and Contractor covering the Work.

3. *Application for Payment* – The form acceptable to Engineer which is to be used by Contractor during the course of the Work in requesting progress or final payments and which is to be accompanied by such supporting documentation as is required by the Contract Documents.

4. *Asbestos* – Any material that contains more than one percent asbestos and is friable or is releasing asbestos fibers into the air above current action levels established by the United States Occupational Safety and Health Administration.

5. *Bid* – The offer or proposal of a Bidder submitted on the prescribed form setting forth the prices for the Work to be performed.

6. *Bidder* – The individual or entity who submits a Bid directly to Owner.

7. *Bidding Documents* – The Bidding Requirements and the proposed Contract Documents (including all Addenda).

8. *Bidding Requirements* – The Advertisement or Invitation to Bid, Instructions to Bidders, bid security of acceptable form, if any, and the Bid Form with any supplements.

9. *Change Order* – A document recommended by Engineer which is signed by Contractor and Owner and authorizes an addition, deletion, or revision in the Work or an adjustment in the Contract Price or the Contract Times, issued on or after the Effective Date of the Agreement.

10. *Claim* – A demand or assertion by Owner or Contractor seeking an adjustment of Contract Price or Contract Times, or both, or other relief with respect to the terms of the Contract. A demand for money or services by a third party is not a Claim.

11. *Contract* – The entire and integrated written agreement between the Owner and Contractor concerning the Work. The Contract supersedes prior negotiations, representations, or agreements, whether written or oral.

12. *Contract Documents* – Those items so designated in the Agreement. Only printed or hard copies of the items listed in the Agreement are Contract Documents. Approved Shop Drawings, other Contractor's submittals, and the reports and drawings of subsurface and physical conditions are not Contract Documents.

Copyright © 2002 National Society of Professional Engineers for EJCDC. All rights reserved.

13. *Contract Price* – The moneys payable by Owner to Contractor for completion of the Work in accordance with the Contract Documents as stated in the Agreement (subject to the provisions of Paragraph 11.03 in the case of Unit Price Work).

14. *Contract Times* – The number of days or the dates stated in the Agreement to: (i) achieve Milestones, if any, (ii) achieve Substantial Completion; and (iii) complete the Work so that it is ready for final payment as evidenced by Engineer's written recommendation of final payment.

15. *Contractor* – The individual or entity with whom Owner has entered into the Agreement.

16. *Cost of the Work* – See Paragraph 11.01.A for definition.

17. *Drawings* – That part of the Contract Documents prepared or approved by Engineer which graphically shows the scope, extent, and character of the Work to be performed by Contractor. Shop Drawings and other Contractor submittals are not Drawings as so defined.

18. *Effective Date of the Agreement* – The date indicated in the Agreement on which it becomes effective, but if no such date is indicated, it means the date on which the Agreement is signed and delivered by the last of the two parties to sign and deliver.

19. *Engineer* – The individual or entity named as such in the Agreement.

20. *Field Order* – A written order issued by Engineer which requires minor changes in the Work but which does not involve a change in the Contract Price or the Contract Times.

21. *General Requirements* – Sections of Division 1 of the Specifications. The General Requirements pertain to all sections of the Specifications.

22. *Hazardous Environmental Condition* – The presence at the Site of Asbestos, PCBs, Petroleum, Hazardous Waste, or Radioactive Material in such quantities or circumstances that may present a substantial danger to persons or property exposed thereto in connection with the Work.

23. *Hazardous Waste* – The term Hazardous Waste shall have the meaning provided in Section 1004 of the Solid Waste Disposal Act (42 USC Section 6903) as amended from time to time.

24. *Laws and Regulations; Laws or Regulations* – Any and all applicable laws, rules, regulations, ordinances, codes, and orders of any and all governmental bodies, agencies, authorities, and courts having jurisdiction.

25. *Liens* – Charges, security interests, or encumbrances upon Project funds, real property, or personal property.

26. *Milestone* – A principal event specified in the Contract Documents relating to an intermediate completion date or time prior to Substantial Completion of all the Work.

27. *Notice of Award* – The written notice by Owner to the Successful Bidder stating that upon timely compliance by the Successful Bidder with the conditions precedent listed therein, Owner will sign and deliver the Agreement.

28. *Notice to Proceed* – A written notice given by Owner to Contractor fixing the date on which the Contract Times will commence to run and on which Contractor shall start to perform the Work under the Contract Documents.

29. *Owner* – The individual or entity with whom Contractor has entered into the Agreement and for whom the Work is to be performed.

Copyright © 2002 National Society of Professional Engineers for EJCDC. All rights reserved.

30. *PCBs* – Polychlorinated biphenyls.

31. *Petroleum* – Petroleum, including crude oil or any fraction thereof which is liquid at standard conditions of temperature and pressure (60 degrees Fahrenheit and 14.7 pounds per square inch absolute), such as oil, petroleum, fuel oil, oil sludge, oil refuse, gasoline, kerosene, and oil mixed with other non-Hazardous Waste and crude oils.

32. *Progress Schedule* – A schedule, prepared and maintained by Contractor, describing the sequence and duration of the activities comprising the Contractor's plan to accomplish the Work within the Contract Times.

33. *Project* – The total construction of which the Work to be performed under the Contract Documents may be the whole, or a part.

34. *Project Manual* – The bound documentary information prepared for bidding and constructing the Work. A listing of the contents of the Project Manual, which may be bound in one or more volumes, is contained in the table(s) of contents.

35. *Radioactive Material* – Source, special nuclear, or byproduct material as defined by the Atomic Energy Act of 1954 (42 USC Section 2011 et seq.) as amended from time to time.

36. *Related Entity* – An officer, director, partner, employee, agent, consultant, or subcontractor.

37. *Resident Project Representative* – The authorized representative of Engineer who may be assigned to the Site or any part thereof.

38. *Samples* – Physical examples of materials, equipment, or workmanship that are representative of some portion of the Work and which establish the standards by which such portion of the Work will be judged.

39. *Schedule of Submittals* – A schedule, prepared and maintained by Contractor, of required submittals and the time requirements to support scheduled performance of related construction activities.

40. *Schedule of Values* – A schedule, prepared and maintained by Contractor, allocating portions of the Contract Price to various portions of the Work and used as the basis for reviewing Contractor's Applications for Payment.

41. *Shop Drawings* – All drawings, diagrams, illustrations, schedules, and other data or information which are specifically prepared or assembled by or for Contractor and submitted by Contractor to illustrate some portion of the Work.

42. *Site* – Lands or areas indicated in the Contract Documents as being furnished by Owner upon which the Work is to be performed, including rights-of-way and easements for access thereto, and such other lands furnished by Owner which are designated for the use of Contractor.

43. *Specifications* – That part of the Contract Documents consisting of written requirements for materials, equipment, systems, standards and workmanship as applied to the Work, and certain administrative requirements and procedural matters applicable thereto.

44. *Subcontractor* – An individual or entity having a direct contract with Contractor or with any other Subcontractor for the performance of a part of the Work at the Site.

45. *Substantial Completion* – The time at which the Work (or a specified part thereof) has progressed to the point where, in the opinion of Engineer, the Work (or a specified part thereof) is sufficiently complete, in accordance with the Contract Documents, so that the Work (or a specified part thereof) can be utilized for

Copyright © 2002 National Society of Professional Engineers for EJCDC. All rights reserved.

the purposes for which it is intended. The terms "substantially complete" and "substantially completed" as applied to all or part of the Work refer to Substantial Completion thereof.

46. *Successful Bidder* – The Bidder submitting a responsive Bid to whom Owner makes an award.

47. *Supplementary Conditions* – That part of the Contract Documents which amends or supplements these General Conditions.

48. *Supplier* – A manufacturer, fabricator, supplier, distributor, materialman, or vendor having a direct contract with Contractor or with any Subcontractor to furnish materials or equipment to be incorporated in the Work by Contractor or any Subcontractor.

49. *Underground Facilities* – All underground pipelines, conduits, ducts, cables, wires, manholes, vaults, tanks, tunnels, or other such facilities or attachments, and any encasements containing such facilities, including those that convey electricity, gases, steam, liquid petroleum products, telephone or other communications, cable television, water, wastewater, storm water, other liquids or chemicals, or traffic or other control systems.

50. *Unit Price Work* – Work to be paid for on the basis of unit prices.

51. *Work* – The entire construction or the various separately identifiable parts thereof required to be provided under the Contract Documents. Work includes and is the result of performing or providing all labor, services, and documentation necessary to produce such construction, and furnishing, installing, and incorporating all materials and equipment into such construction, all as required by the Contract Documents.

52. *Work Change Directive* – A written statement to Contractor issued on or after the Effective Date of the Agreement and signed by Owner and recommended by Engineer ordering an addition, deletion, or revision in the Work, or responding to differing or unforeseen subsurface or physical conditions under which the Work is to be performed or to emergencies. A Work Change Directive will not change the Contract Price or the Contract Times but is evidence that the parties expect that the change ordered or documented by a Work Change Directive will be incorporated in a subsequently issued Change Order following negotiations by the parties as to its effect, if any, on the Contract Price or Contract Times.

1.02 *Terminology*

A. The following words or terms are not defined but, when used in the Bidding Requirements or Contract Documents, have the following meaning.

B. *Intent of Certain Terms or Adjectives*

1. The Contract Documents include the terms "as allowed," "as approved," "as ordered", "as directed" or terms of like effect or import to authorize an exercise of professional judgment by Engineer. In addition, the adjectives "reasonable," "suitable," "acceptable," "proper," "satisfactory," or adjectives of like effect or import are used to describe an action or determination of Engineer as to the Work. It is intended that such exercise of professional judgment, action or determination will be solely to evaluate, in general, the Work for compliance with the requirements of and information in the Contract Documents and conformance with the design concept of the completed Project as a functioning whole as shown or indicated in the Contract Documents (unless there is a specific statement indicating otherwise). The use of any such term or adjective is not intended to and shall not be effective to assign to Engineer any duty or authority to supervise or direct the performance of the Work or any duty or authority to undertake responsibility contrary to the provisions of Paragraph 9.09 or any other provision of the Contract Documents.

C. *Day*

Copyright © 2002 National Society of Professional Engineers for EJCDC. All rights reserved.

1. The word "day" means a calendar day of 24 hours measured from midnight to the next midnight.

D. *Defective*

1. The word "defective," when modifying the word "Work," refers to Work that is unsatisfactory, faulty, or deficient in that it:

a. does not conform to the Contract Documents, or

b. does not meet the requirements of any applicable inspection, reference standard, test, or approval referred to in the Contract Documents, or

c. has been damaged prior to Engineer's recommendation of final payment (unless responsibility for the protection thereof has been assumed by Owner at Substantial Completion in accordance with Paragraph 14.04 or 14.05).

E. *Furnish, Install, Perform, Provide*

1. The word "furnish," when used in connection with services, materials, or equipment, shall mean to supply and deliver said services, materials, or equipment to the Site (or some other specified location) ready for use or installation and in usable or operable condition.

2. The word "install," when used in connection with services, materials, or equipment, shall mean to put into use or place in final position said services, materials, or equipment complete and ready for intended use.

3. The words "perform" or "provide," when used in connection with services, materials, or equipment, shall mean to furnish and install said services, materials, or equipment complete and ready for intended use.

4. When "furnish," "install," "perform," or "provide" is not used in connection with services, materials, or equipment in a context clearly requiring an obligation of Contractor, "provide" is implied.

F. Unless stated otherwise in the Contract Documents, words or phrases which have a well-known technical or construction industry or trade meaning are used in the Contract Documents in accordance with such recognized meaning.

ARTICLE 2 – PRELIMINARY MATTERS

2.01 *Delivery of Bonds and Evidence of Insurance*

A. When Contractor delivers the executed counterparts of the Agreement to Owner, Contractor shall also deliver to Owner such bonds as Contractor may be required to furnish.

B. *Evidence of Insurance:* Before any Work at the Site is started, Contractor and Owner shall each deliver to the other, with copies to each additional insured identified in the Supplementary Conditions, certificates of insurance (and other evidence of insurance which either of them or any additional insured may reasonably request) which Contractor and Owner respectively are required to purchase and maintain in accordance with Article 5.

2.02 *Copies of Documents*

A. Owner shall furnish to Contractor up to ten printed or hard copies of the Drawings and Project Manual. Additional copies will be furnished upon request at the cost of reproduction.

Copyright © 2002 National Society of Professional Engineers for EJCDC. All rights reserved.

2.03 *Commencement of Contract Times; Notice to Proceed*

A. The Contract Times will commence to run on the thirtieth day after the Effective Date of the Agreement or, if a Notice to Proceed is given, on the day indicated in the Notice to Proceed. A Notice to Proceed may be given at any time within 30 days after the Effective Date of the Agreement. In no event will the Contract Times commence to run later than the sixtieth day after the day of Bid opening or the thirtieth day after the Effective Date of the Agreement, whichever date is earlier.

2.04 *Starting the Work*

A. Contractor shall start to perform the Work on the date when the Contract Times commence to run. No Work shall be done at the Site prior to the date on which the Contract Times commence to run.

2.05 *Before Starting Construction*

A. *Preliminary Schedules:* Within 10 days after the Effective Date of the Agreement (unless otherwise specified in the General Requirements), Contractor shall submit to Engineer for timely review:

1. a preliminary Progress Schedule; indicating the times (numbers of days or dates) for starting and completing the various stages of the Work, including any Milestones specified in the Contract Documents;

2. a preliminary Schedule of Submittals; and

3. a preliminary Schedule of Values for all of the Work which includes quantities and prices of items which when added together equal the Contract Price and subdivides the Work into component parts in sufficient detail to serve as the basis for progress payments during performance of the Work. Such prices will include an appropriate amount of overhead and profit applicable to each item of Work.

2.06 *Preconstruction Conference*

A. Before any Work at the Site is started, a conference attended by Owner, Contractor, Engineer, and others as appropriate will be held to establish a working understanding among the parties as to the Work and to discuss the schedules referred to in Paragraph 2.05.A, procedures for handling Shop Drawings and other submittals, processing Applications for Payment, and maintaining required records.

2.07 *Initial Acceptance of Schedules*

A. At least 10 days before submission of the first Application for Payment a conference attended by Contractor, Engineer, and others as appropriate will be held to review for acceptability to Engineer as provided below the schedules submitted in accordance with Paragraph 2.05.A. Contractor shall have an additional 10 days to make corrections and adjustments and to complete and resubmit the schedules. No progress payment shall be made to Contractor until acceptable schedules are submitted to Engineer.

1. The Progress Schedule will be acceptable to Engineer if it provides an orderly progression of the Work to completion within the Contract Times. Such acceptance will not impose on Engineer responsibility for the Progress Schedule, for sequencing, scheduling, or progress of the Work nor interfere with or relieve Contractor from Contractor's full responsibility therefor.

2. Contractor's Schedule of Submittals will be acceptable to Engineer if it provides a workable arrangement for reviewing and processing the required submittals.

3. Contractor's Schedule of Values will be acceptable to Engineer as to form and substance if it provides a reasonable allocation of the Contract Price to component parts of the Work.

Copyright © 2002 National Society of Professional Engineers for EJCDC. All rights reserved.

ARTICLE 3 – CONTRACT DOCUMENTS: INTENT, AMENDING, REUSE

3.01 *Intent*

A. The Contract Documents are complementary; what is required by one is as binding as if required by all.

B. It is the intent of the Contract Documents to describe a functionally complete Project (or part thereof) to be constructed in accordance with the Contract Documents. Any labor, documentation, services, materials, or equipment that may reasonably be inferred from the Contract Documents or from prevailing custom or trade usage as being required to produce the intended result will be provided whether or not specifically called for at no additional cost to Owner.

C. Clarifications and interpretations of the Contract Documents shall be issued by Engineer as provided in Article 9.

3.02 *Reference Standards*

A. Standards, Specifications, Codes, Laws, and Regulations

1. Reference to standards, specifications, manuals, or codes of any technical society, organization, or association, or to Laws or Regulations, whether such reference be specific or by implication, shall mean the standard, specification, manual, code, or Laws or Regulations in effect at the time of opening of Bids (or on the Effective Date of the Agreement if there were no Bids), except as may be otherwise specifically stated in the Contract Documents.

2. No provision of any such standard, specification, manual or code, or any instruction of a Supplier shall be effective to change the duties or responsibilities of Owner, Contractor, or Engineer, or any of their subcontractors, consultants, agents, or employees from those set forth in the Contract Documents. No such provision or instruction shall be effective to assign to Owner, or Engineer, or any of, their Related Entities, any duty or authority to supervise or direct the performance of the Work or any duty or authority to undertake responsibility inconsistent with the provisions of the Contract Documents.

3.03 *Reporting and Resolving Discrepancies*

A. Reporting Discrepancies

1. *Contractor's Review of Contract Documents Before Starting Work*: Before undertaking each part of the Work, Contractor shall carefully study and compare the Contract Documents and check and verify pertinent figures therein and all applicable field measurements. Contractor shall promptly report in writing to Engineer any conflict, error, ambiguity, or discrepancy which Contractor may discover and shall obtain a written interpretation or clarification from Engineer before proceeding with any Work affected thereby.

2. *Contractor's Review of Contract Documents During Performance of Work*: If, during the performance of the Work, Contractor discovers any conflict, error, ambiguity, or discrepancy within the Contract Documents or between the Contract Documents and any provision of any Law or Regulation applicable to the performance of the Work or of any standard, specification, manual or code, or of any instruction of any Supplier, Contractor shall promptly report it to Engineer in writing. Contractor shall not proceed with the Work affected thereby (except in an emergency as required by Paragraph 6.16.A) until an amendment or supplement to the Contract Documents has been issued by one of the methods indicated in Paragraph 3.04.

3. Contractor shall not be liable to Owner or Engineer for failure to report any conflict, error, ambiguity, or discrepancy in the Contract Documents unless Contractor knew or reasonably should have known thereof.

B. Resolving Discrepancies

Copyright © 2002 National Society of Professional Engineers for EJCDC. All rights reserved.

1. Except as may be otherwise specifically stated in the Contract Documents, the provisions of the Contract Documents shall take precedence in resolving any conflict, error, ambiguity, or discrepancy between the provisions of the Contract Documents and:

   a. the provisions of any standard, specification, manual, code, or instruction (whether or not specifically incorporated by reference in the Contract Documents); or

   b. the provisions of any Laws or Regulations applicable to the performance of the Work (unless such an interpretation of the provisions of the Contract Documents would result in violation of such Law or Regulation).

3.04 *Amending and Supplementing Contract Documents*

A. The Contract Documents may be amended to provide for additions, deletions, and revisions in the Work or to modify the terms and conditions thereof by either a Change Order or a Work Change Directive.

B. The requirements of the Contract Documents may be supplemented, and minor variations and deviations in the Work may be authorized, by one or more of the following ways:

   1. A Field Order;

   2. Engineer's approval of a Shop Drawing or Sample; (Subject to the provisions of Paragraph 6.17.D.3); or

   3. Engineer's written interpretation or clarification.

3.05 *Reuse of Documents*

A. Contractor and any Subcontractor or Supplier or other individual or entity performing or furnishing all of the Work under a direct or indirect contract with Contractor, shall not:

   1. have or acquire any title to or ownership rights in any of the Drawings, Specifications, or other documents (or copies of any thereof) prepared by or bearing the seal of Engineer or Engineer's consultants, including electronic media editions; or

   2. reuse any of such Drawings, Specifications, other documents, or copies thereof on extensions of the Project or any other project without written consent of Owner and Engineer and specific written verification or adaption by Engineer.

B. The prohibition of this Paragraph 3.05 will survive final payment, or termination of the Contract. Nothing herein shall preclude Contractor from retaining copies of the Contract Documents for record purposes.

3.06 *Electronic Data*

A. Copies of data furnished by Owner or Engineer to Contractor or Contractor to Owner or Engineer that may be relied upon are limited to the printed copies (also known as hard copies). Files in electronic media format of text, data, graphics, or other types are furnished only for the convenience of the receiving party. Any conclusion or information obtained or derived from such electronic files will be at the user's sole risk. If there is a discrepancy between the electronic files and the hard copies, the hard copies govern.

B. Because data stored in electronic media format can deteriorate or be modified inadvertently or otherwise without authorization of the data's creator, the party receiving electronic files agrees that it will perform acceptance tests or procedures within 60 days, after which the receiving party shall be deemed to have accepted the data thus transferred. Any errors detected within the 60-day acceptance period will be corrected by the transferring party..

Copyright © 2002 National Society of Professional Engineers for EJCDC. All rights reserved.

C. When transferring documents in electronic media format, the transferring party makes no representations as to long term compatibility, usability, or readability of documents resulting from the use of software application packages, operating systems, or computer hardware differing from those used by the data's creator.

ARTICLE 4 – AVAILABILITY OF LANDS; SUBSURFACE AND PHYSICAL CONDITIONS; HAZARDOUS ENVIRONMENTAL CONDITIONS; REFERENCE POINTS

4.01 *Availability of Lands*

A. Owner shall furnish the Site. Owner shall notify Contractor of any encumbrances or restrictions not of general application but specifically related to use of the Site with which Contractor must comply in performing the Work. Owner will obtain in a timely manner and pay for easements for permanent structures or permanent changes in existing facilities. If Contractor and Owner are unable to agree on entitlement to or on the amount or extent, if any, of any adjustment in the Contract Price or Contract Times, or both, as a result of any delay in Owner's furnishing the Site or a part thereof, Contractor may make a Claim therefor as provided in Paragraph 10.05.

B. Upon reasonable written request, Owner shall furnish Contractor with a current statement of record legal title and legal description of the lands upon which the Work is to be performed and Owner's interest therein as necessary for giving notice of or filing a mechanic's or construction lien against such lands in accordance with applicable Laws and Regulations.

C. Contractor shall provide for all additional lands and access thereto that may be required for temporary construction facilities or storage of materials and equipment.

4.02 *Subsurface and Physical Conditions*

A. *Reports and Drawings:* The Supplementary Conditions identify:

1. those reports of explorations and tests of subsurface conditions at or contiguous to the Site that Engineer has used in preparing the Contract Documents; and

2. those drawings of physical conditions in or relating to existing surface or subsurface structures at or contiguous to the Site (except Underground Facilities) that Engineer has used in preparing the Contract Documents.

B. *Limited Reliance by Contractor on Technical Data Authorized:* Contractor may rely upon the general accuracy of the "technical data" contained in such reports and drawings, but such reports and drawings are not Contract Documents. Such "technical data" is identified in the Supplementary Conditions. Except for such reliance on such "technical data," Contractor may not rely upon or make any claim against Owner or Engineer, or any of their Related Entities with respect to:

1. the completeness of such reports and drawings for Contractor's purposes, including, but not limited to, any aspects of the means, methods, techniques, sequences, and procedures of construction to be employed by Contractor, and safety precautions and programs incident thereto; or

2. other data, interpretations, opinions, and information contained in such reports or shown or indicated in such drawings; or

3. any Contractor interpretation of or conclusion drawn from any "technical data" or any such other data, interpretations, opinions, or information.

Copyright © 2002 National Society of Professional Engineers for EJCDC. All rights reserved.

4.03 *Differing Subsurface or Physical Conditions*

A. *Notice:* If Contractor believes that any subsurface or physical condition at or contiguous to the Site that is uncovered or revealed either:

1. is of such a nature as to establish that any "technical data" on which Contractor is entitled to rely as provided in Paragraph 4.02 is materially inaccurate; or

2. is of such a nature as to require a change in the Contract Documents; or

3. differs materially from that shown or indicated in the Contract Documents; or

4. is of an unusual nature, and differs materially from conditions ordinarily encountered and generally recognized as inherent in work of the character provided for in the Contract Documents; then Contractor shall, promptly after becoming aware thereof and before further disturbing the subsurface or physical conditions or performing any Work in connection therewith (except in an emergency as required by Paragraph 6.16.A), notify Owner and Engineer in writing about such condition. Contractor shall not further disturb such condition or perform any Work in connection therewith (except as aforesaid) until receipt of written order to do so.

B. *Engineer's Review*: After receipt of written notice as required by Paragraph 4.03.A, Engineer will promptly review the pertinent condition, determine the necessity of Owner's obtaining additional exploration or tests with respect thereto, and advise Owner in writing (with a copy to Contractor) of Engineer's findings and conclusions.

C. Possible Price and Times Adjustments

1. The Contract Price or the Contract Times, or both, will be equitably adjusted to the extent that the existence of such differing subsurface or physical condition causes an increase or decrease in Contractor's cost of, or time required for, performance of the Work; subject, however, to the following:

a. such condition must meet any one or more of the categories described in Paragraph 4.03.A; and

b. with respect to Work that is paid for on a Unit Price Basis, any adjustment in Contract Price will be subject to the provisions of Paragraphs 9.07 and 11.03.

2. Contractor shall not be entitled to any adjustment in the Contract Price or Contract Times if:

a. Contractor knew of the existence of such conditions at the time Contractor made a final commitment to Owner with respect to Contract Price and Contract Times by the submission of a Bid or becoming bound under a negotiated contract; or

b. the existence of such condition could reasonably have been discovered or revealed as a result of any examination, investigation, exploration, test, or study of the Site and contiguous areas required by the Bidding Requirements or Contract Documents to be conducted by or for Contractor prior to Contractor's making such final commitment; or

c. Contractor failed to give the written notice as required by Paragraph 4.03.A.

3. If Owner and Contractor are unable to agree on entitlement to or on the amount or extent, if any, of any adjustment in the Contract Price or Contract Times, or both, a Claim may be made therefor as provided in Paragraph 10.05. However, Owner and Engineer, and any of their Related Entities shall not be liable to Contractor for any claims, costs, losses, or damages (including but not limited to all fees and charges of engineers, architects, attorneys, and other professionals and all court or arbitration or other dispute resolution costs) sustained by Contractor on or in connection with any other project or anticipated project.

Copyright © 2002 National Society of Professional Engineers for EJCDC. All rights reserved.

4.04 *Underground Facilities*

A. *Shown or Indicated:* The information and data shown or indicated in the Contract Documents with respect to existing Underground Facilities at or contiguous to the Site is based on information and data furnished to Owner or Engineer by the owners of such Underground Facilities, including Owner, or by others. Unless it is otherwise expressly provided in the Supplementary Conditions:

1. Owner and Engineer shall not be responsible for the accuracy or completeness of any such information or data; and

2. the cost of all of the following will be included in the Contract Price, and Contractor shall have full responsibility for:

a. reviewing and checking all such information and data,

b. locating all Underground Facilities shown or indicated in the Contract Documents,

c. coordination of the Work with the owners of such Underground Facilities, including Owner, during construction, and

d. the safety and protection of all such Underground Facilities and repairing any damage thereto resulting from the Work.

B. *Not Shown or Indicated*

1. If an Underground Facility is uncovered or revealed at or contiguous to the Site which was not shown or indicated, or not shown or indicated with reasonable accuracy in the Contract Documents, Contractor shall, promptly after becoming aware thereof and before further disturbing conditions affected thereby or performing any Work in connection therewith (except in an emergency as required by Paragraph 6.16.A), identify the owner of such Underground Facility and give written notice to that owner and to Owner and Engineer. Engineer will promptly review the Underground Facility and determine the extent, if any, to which a change is required in the Contract Documents to reflect and document the consequences of the existence or location of the Underground Facility. During such time, Contractor shall be responsible for the safety and protection of such Underground Facility.

2. If Engineer concludes that a change in the Contract Documents is required, a Work Change Directive or a Change Order will be issued to reflect and document such consequences. An equitable adjustment shall be made in the Contract Price or Contract Times, or both, to the extent that they are attributable to the existence or location of any Underground Facility that was not shown or indicated or not shown or indicated with reasonable accuracy in the Contract Documents and that Contractor did not know of and could not reasonably have been expected to be aware of or to have anticipated. If Owner and Contractor are unable to agree on entitlement to or on the amount or extent, if any, of any such adjustment in Contract Price or Contract Times, Owner or Contractor may make a Claim therefor as provided in Paragraph 10.05.

4.05 *Reference Points*

A. Owner shall provide engineering surveys to establish reference points for construction which in Engineer's judgment are necessary to enable Contractor to proceed with the Work. Contractor shall be responsible for laying out the Work, shall protect and preserve the established reference points and property monuments, and shall make no changes or relocations without the prior written approval of Owner. Contractor shall report to Engineer whenever any reference point or property monument is lost or destroyed or requires relocation because of necessary changes in grades or locations, and shall be responsible for the accurate replacement or relocation of such reference points or property monuments by professionally qualified personnel.

Copyright © 2002 National Society of Professional Engineers for EJCDC. All rights reserved.

4.06 *Hazardous Environmental Condition at Site*

A. *Reports and Drawings:* Reference is made to the Supplementary Conditions for the identification of those reports and drawings relating to a Hazardous Environmental Condition identified at the Site, if any, that have been utilized by the Engineer in the preparation of the Contract Documents.

B. *Limited Reliance by Contractor on Technical Data Authorized:* Contractor may rely upon the general accuracy of the "technical data" contained in such reports and drawings, but such reports and drawings are not Contract Documents. Such "technical data" is identified in the Supplementary Conditions. Except for such reliance on such "technical data," Contractor may not rely upon or make any claim against Owner or Engineer, or any of their Related Entities with respect to:

1. the completeness of such reports and drawings for Contractor's purposes, including, but not limited to, any aspects of the means, methods, techniques, sequences and procedures of construction to be employed by Contractor and safety precautions and programs incident thereto; or

2. other data, interpretations, opinions and information contained in such reports or shown or indicated in such drawings; or

3. any Contractor interpretation of or conclusion drawn from any "technical data" or any such other data, interpretations, opinions or information.

C. Contractor shall not be responsible for any Hazardous Environmental Condition uncovered or revealed at the Site which was not shown or indicated in Drawings or Specifications or identified in the Contract Documents to be within the scope of the Work. Contractor shall be responsible for a Hazardous Environmental Condition created with any materials brought to the Site by Contractor, Subcontractors, Suppliers, or anyone else for whom Contractor is responsible.

D. If Contractor encounters a Hazardous Environmental Condition or if Contractor or anyone for whom Contractor is responsible creates a Hazardous Environmental Condition, Contractor shall immediately: (i) secure or otherwise isolate such condition; (ii) stop all Work in connection with such condition and in any area affected thereby (except in an emergency as required by Paragraph 6.16.A); and (iii) notify Owner and Engineer (and promptly thereafter confirm such notice in writing). Owner shall promptly consult with Engineer concerning the necessity for Owner to retain a qualified expert to evaluate such condition or take corrective action, if any.

E. Contractor shall not be required to resume Work in connection with such condition or in any affected area until after Owner has obtained any required permits related thereto and delivered to Contractor written notice: (i) specifying that such condition and any affected area is or has been rendered safe for the resumption of Work; or (ii) specifying any special conditions under which such Work may be resumed safely. If Owner and Contractor cannot agree as to entitlement to or on the amount or extent, if any, of any adjustment in Contract Price or Contract Times, or both, as a result of such Work stoppage or such special conditions under which Work is agreed to be resumed by Contractor, either party may make a Claim therefor as provided in Paragraph 10.05.

F. If after receipt of such written notice Contractor does not agree to resume such Work based on a reasonable belief it is unsafe, or does not agree to resume such Work under such special conditions, then Owner may order the portion of the Work that is in the area affected by such condition to be deleted from the Work. If Owner and Contractor cannot agree as to entitlement to or on the amount or extent, if any, of an adjustment in Contract Price or Contract Times as a result of deleting such portion of the Work, then either party may make a Claim therefor as provided in Paragraph 10.05. Owner may have such deleted portion of the Work performed by Owner's own forces or others in accordance with Article 7.

G. To the fullest extent permitted by Laws and Regulations, Owner shall indemnify and hold harmless Contractor, Subcontractors, and Engineer, and the officers, directors, partners, employees, agents, consultants, and subcontractors of each and any of them from and against all claims, costs, losses, and damages (including but

Copyright © 2002 National Society of Professional Engineers for EJCDC. All rights reserved.

not limited to all fees and charges of engineers, architects, attorneys, and other professionals and all court or arbitration or other dispute resolution costs) arising out of or relating to a Hazardous Environmental Condition, provided that such Hazardous Environmental Condition: (i) was not shown or indicated in the Drawings or Specifications or identified in the Contract Documents to be included within the scope of the Work, and (ii) was not created by Contractor or by anyone for whom Contractor is responsible. Nothing in this Paragraph 4.06. G shall obligate Owner to indemnify any individual or entity from and against the consequences of that individual's or entity's own negligence.

H. To the fullest extent permitted by Laws and Regulations, Contractor shall indemnify and hold harmless Owner and Engineer, and the officers, directors, partners, employees, agents, consultants, and subcontractors of each and any of them from and against all claims, costs, losses, and damages (including but not limited to all fees and charges of engineers, architects, attorneys, and other professionals and all court or arbitration or other dispute resolution costs) arising out of or relating to a Hazardous Environmental Condition created by Contractor or by anyone for whom Contractor is responsible. Nothing in this Paragraph 4.06.H shall obligate Contractor to indemnify any individual or entity from and against the consequences of that individual's or entity's own negligence.

I. The provisions of Paragraphs 4.02, 4.03, and 4.04 do not apply to a Hazardous Environmental Condition uncovered or revealed at the Site.

ARTICLE 5 – BONDS AND INSURANCE

5.01 *Performance, Payment, and Other Bonds*

A. Contractor shall furnish performance and payment bonds, each in an amount at least equal to the Contract Price as security for the faithful performance and payment of all of Contractor's obligations under the Contract Documents. These bonds shall remain in effect until one year after the date when final payment becomes due or until completion of the correction period specified in Paragraph 13.07, whichever is later, except as provided otherwise by Laws or Regulations or by the Contract Documents. Contractor shall also furnish such other bonds as are required by the Contract Documents.

B. All bonds shall be in the form prescribed by the Contract Documents except as provided otherwise by Laws or Regulations, and shall be executed by such sureties as are named in the current list of "Companies Holding Certificates of Authority as Acceptable Sureties on Federal Bonds and as Acceptable Reinsuring Companies" as published in Circular 570 (amended) by the Financial Management Service, Surety Bond Branch, U.S. Department of the Treasury. All bonds signed by an agent must be accompanied by a certified copy of the agent's authority to act.

C. If the surety on any bond furnished by Contractor is declared bankrupt or becomes insolvent or its right to do business is terminated in any state where any part of the Project is located or it ceases to meet the requirements of Paragraph 5.01.B, Contractor shall promptly notify Owner and Engineer and shall, within 20 days after the event giving rise to such notification, provide another bond and surety, both of which shall comply with the requirements of Paragraphs 5.01.B and 5.02.

5.02 *Licensed Sureties and Insurers*

A. All bonds and insurance required by the Contract Documents to be purchased and maintained by Owner or Contractor shall be obtained from surety or insurance companies that are duly licensed or authorized in the jurisdiction in which the Project is located to issue bonds or insurance policies for the limits and coverages so required. Such surety and insurance companies shall also meet such additional requirements and qualifications as may be provided in the Supplementary Conditions.

Copyright © 2002 National Society of Professional Engineers for EJCDC. All rights reserved.

5.03 *Certificates of Insurance*

A. Contractor shall deliver to Owner, with copies to each additional insured identified in the Supplementary Conditions, certificates of insurance (and other evidence of insurance requested by Owner or any other additional insured) which Contractor is required to purchase and maintain.

B. Owner shall deliver to Contractor, with copies to each additional insured identified in the Supplementary Conditions, certificates of insurance (and other evidence of insurance requested by Contractor or any other additional insured) which Owner is required to purchase and maintain.

5.04 *Contractor's Liability Insurance*

A. Contractor shall purchase and maintain such liability and other insurance as is appropriate for the Work being performed and as will provide protection from claims set forth below which may arise out of or result from Contractor's performance of the Work and Contractor's other obligations under the Contract Documents, whether it is to be performed by Contractor, any Subcontractor or Supplier, or by anyone directly or indirectly employed by any of them to perform any of the Work, or by anyone for whose acts any of them may be liable:

1. claims under workers' compensation, disability benefits, and other similar employee benefit acts;

2. claims for damages because of bodily injury, occupational sickness or disease, or death of Contractor's employees;

3. claims for damages because of bodily injury, sickness or disease, or death of any person other than Contractor's employees;

4. claims for damages insured by reasonably available personal injury liability coverage which are sustained:

   a. by any person as a result of an offense directly or indirectly related to the employment of such person by Contractor, or

   b. by any other person for any other reason;

5. claims for damages, other than to the Work itself, because of injury to or destruction of tangible property wherever located, including loss of use resulting therefrom; and

6. claims for damages because of bodily injury or death of any person or property damage arising out of the ownership, maintenance or use of any motor vehicle.

B. The policies of insurance required by this Paragraph 5.04 shall:

1. with respect to insurance required by Paragraphs 5.04.A.3 through 5.04.A.6 inclusive, include as additional insured (subject to any customary exclusion regarding professional liability) Owner and Engineer, and any other individuals or entities identified in the Supplementary Conditions, all of whom shall be listed as additional insureds, and include coverage for the respective officers, directors, partners, employees, agents, consultants and subcontractors of each and any of all such additional insureds, and the insurance afforded to these additional insureds shall provide primary coverage for all claims covered thereby;

2. include at least the specific coverages and be written for not less than the limits of liability provided in the Supplementary Conditions or required by Laws or Regulations, whichever is greater;

3. include completed operations insurance;

Copyright © 2002 National Society of Professional Engineers for EJCDC. All rights reserved.

4. include contractual liability insurance covering Contractor's indemnity obligations under Paragraphs 6.11 and 6.20;

5. contain a provision or endorsement that the coverage afforded will not be canceled, materially changed or renewal refused until at least 30 days prior written notice has been given to Owner and Contractor and to each other additional insured identified in the Supplementary Conditions to whom a certificate of insurance has been issued (and the certificates of insurance furnished by the Contractor pursuant to Paragraph 5.03 will so provide);

6. remain in effect at least until final payment and at all times thereafter when Contractor may be correcting, removing, or replacing defective Work in accordance with Paragraph 13.07; and

7. with respect to completed operations insurance, and any insurance coverage written on a claims-made basis, remain in effect for at least two years after final payment.

    a. Contractor shall furnish Owner and each other additional insured identified in the Supplementary Conditions, to whom a certificate of insurance has been issued, evidence satisfactory to Owner and any such additional insured of continuation of such insurance at final payment and one year thereafter.

5.05 *Owner's Liability Insurance*

A. In addition to the insurance required to be provided by Contractor under Paragraph 5.04, Owner, at Owner's option, may purchase and maintain at Owner's expense Owner's own liability insurance as will protect Owner against claims which may arise from operations under the Contract Documents.

5.06 *Property Insurance*

A. Unless otherwise provided in the Supplementary Conditions, Owner shall purchase and maintain property insurance upon the Work at the Site in the amount of the full replacement cost thereof (subject to such deductible amounts as may be provided in the Supplementary Conditions or required by Laws and Regulations). This insurance shall:

1. include the interests of Owner, Contractor, Subcontractors, and Engineer, and any other individuals or entities identified in the Supplementary Conditions, and the officers, directors, partners, employees, agents, consultants and subcontractors of each and any of them, each of whom is deemed to have an insurable interest and shall be listed as an insured or additional insured;

2. be written on a Builder's Risk "all-risk" or open peril or special causes of loss policy form that shall at least include insurance for physical loss or damage to the Work, temporary buildings, false work, and materials and equipment in transit, and shall insure against at least the following perils or causes of loss: fire, lightning, extended coverage, theft, vandalism and malicious mischief, earthquake, collapse, debris removal, demolition occasioned by enforcement of Laws and Regulations, water damage, (other than caused by flood) and such other perils or causes of loss as may be specifically required by the Supplementary Conditions;

3. include expenses incurred in the repair or replacement of any insured property (including but not limited to fees and charges of engineers and architects);

4. cover materials and equipment stored at the Site or at another location that was agreed to in writing by Owner prior to being incorporated in the Work, provided that such materials and equipment have been included in an Application for Payment recommended by Engineer;

5. allow for partial utilization of the Work by Owner;

Copyright © 2002 National Society of Professional Engineers for EJCDC. All rights reserved.

6. include testing and startup; and

7. be maintained in effect until final payment is made unless otherwise agreed to in writing by Owner, Contractor, and Engineer with 30 days written notice to each other additional insured to whom a certificate of insurance has been issued.

B. Owner shall purchase and maintain such boiler and machinery insurance or additional property insurance as may be required by the Supplementary Conditions or Laws and Regulations which will include the interests of Owner, Contractor, Subcontractors, and Engineer, and any other individuals or entities identified in the Supplementary Conditions, and the officers, directors, partners, employees, agents, consultants and subcontractors of each and any of them, each of whom is deemed to have an insurable interest and shall be listed as an insured or additional insured.

C. All the policies of insurance (and the certificates or other evidence thereof) required to be purchased and maintained in accordance with Paragraph 5.06 will contain a provision or endorsement that the coverage afforded will not be canceled or materially changed or renewal refused until at least 30 days prior written notice has been given to Owner and Contractor and to each other additional insured to whom a certificate of insurance has been issued and will contain waiver provisions in accordance with Paragraph 5.07.

D. Owner shall not be responsible for purchasing and maintaining any property insurance specified in this Paragraph 5.06 to protect the interests of Contractor, Subcontractors, or others in the Work to the extent of any deductible amounts that are identified in the Supplementary Conditions. The risk of loss within such identified deductible amount will be borne by Contractor, Subcontractors, or others suffering any such loss, and if any of them wishes property insurance coverage within the limits of such amounts, each may purchase and maintain it at the purchaser's own expense.

E. If Contractor requests in writing that other special insurance be included in the property insurance policies provided under Paragraph 5.06, Owner shall, if possible, include such insurance, and the cost thereof will be charged to Contractor by appropriate Change Order. Prior to commencement of the Work at the Site, Owner shall in writing advise Contractor whether or not such other insurance has been procured by Owner.

5.07 *Waiver of Rights*

A. Owner and Contractor intend that all policies purchased in accordance with Paragraph 5.06 will protect Owner, Contractor, Subcontractors, and Engineer, and all other individuals or entities identified in the Supplementary Conditions to be listed as insureds or additional insureds (and the officers, directors, partners, employees, agents, consultants and subcontractors of each and any of them) in such policies and will provide primary coverage for all losses and damages caused by the perils or causes of loss covered thereby. All such policies shall contain provisions to the effect that in the event of payment of any loss or damage the insurers will have no rights of recovery against any of the insureds or additional insureds thereunder. Owner and Contractor waive all rights against each other and their respective officers, directors, partners, employees, agents, consultants and subcontractors of each and any of them for all losses and damages caused by, arising out of or resulting from any of the perils or causes of loss covered by such policies and any other property insurance applicable to the Work; and, in addition, waive all such rights against Subcontractors, and Engineer, and all other individuals or entities identified in the Supplementary Conditions to be listed as insured or additional insured (and the officers, directors, partners, employees, agents, consultants and subcontractors of each and any of them) under such policies for losses and damages so caused. None of the above waivers shall extend to the rights that any party making such waiver may have to the proceeds of insurance held by Owner as trustee or otherwise payable under any policy so issued.

B. Owner waives all rights against Contractor, Subcontractors, and Engineer, and the officers, directors, partners, employees, agents, consultants and subcontractors of each and any of them for:

Copyright © 2002 National Society of Professional Engineers for EJCDC. All rights reserved.

1. loss due to business interruption, loss of use, or other consequential loss extending beyond direct physical loss or damage to Owner's property or the Work caused by, arising out of, or resulting from fire or other perils whether or not insured by Owner; and

2. loss or damage to the completed Project or part thereof caused by, arising out of, or resulting from fire or other insured peril or cause of loss covered by any property insurance maintained on the completed Project or part thereof by Owner during partial utilization pursuant to Paragraph 14.05, after Substantial Completion pursuant to Paragraph 14.04, or after final payment pursuant to Paragraph 14.07.

C. Any insurance policy maintained by Owner covering any loss, damage or consequential loss referred to in Paragraph 5.07.B shall contain provisions to the effect that in the event of payment of any such loss, damage, or consequential loss, the insurers will have no rights of recovery against Contractor, Subcontractors, or Engineer, and the officers, directors, partners, employees, agents, consultants and subcontractors of each and any of them.

5.08 *Receipt and Application of Insurance Proceeds*

A. Any insured loss under the policies of insurance required by Paragraph 5.06 will be adjusted with Owner and made payable to Owner as fiduciary for the insureds, as their interests may appear, subject to the requirements of any applicable mortgage clause and of Paragraph 5.08.B. Owner shall deposit in a separate account any money so received and shall distribute it in accordance with such agreement as the parties in interest may reach. If no other special agreement is reached, the damaged Work shall be repaired or replaced, the moneys so received applied on account thereof, and the Work and the cost thereof covered by an appropriate Change Order .

B. Owner as fiduciary shall have power to adjust and settle any loss with the insurers unless one of the parties in interest shall object in writing within 15 days after the occurrence of loss to Owner's exercise of this power. If such objection be made, Owner as fiduciary shall make settlement with the insurers in accordance with such agreement as the parties in interest may reach. If no such agreement among the parties in interest is reached, Owner as fiduciary shall adjust and settle the loss with the insurers and, if required in writing by any party in interest, Owner as fiduciary shall give bond for the proper performance of such duties.

5.09 *Acceptance of Bonds and Insurance; Option to Replace*

A. If either Owner or Contractor has any objection to the coverage afforded by or other provisions of the bonds or insurance required to be purchased and maintained by the other party in accordance with Article 5 on the basis of non-conformance with the Contract Documents, the objecting party shall so notify the other party in writing within 10 days after receipt of the certificates (or other evidence requested) required by Paragraph 2.01.B. Owner and Contractor shall each provide to the other such additional information in respect of insurance provided as the other may reasonably request. If either party does not purchase or maintain all of the bonds and insurance required of such party by the Contract Documents, such party shall notify the other party in writing of such failure to purchase prior to the start of the Work, or of such failure to maintain prior to any change in the required coverage. Without prejudice to any other right or remedy, the other party may elect to obtain equivalent bonds or insurance to protect such other party's interests at the expense of the party who was required to provide such coverage, and a Change Order shall be issued to adjust the Contract Price accordingly.

5.10 *Partial Utilization, Acknowledgment of Property Insurer*

A. If Owner finds it necessary to occupy or use a portion or portions of the Work prior to Substantial Completion of all the Work as provided in Paragraph 14.05, no such use or occupancy shall commence before the insurers providing the property insurance pursuant to Paragraph 5.06 have acknowledged notice thereof and in writing effected any changes in coverage necessitated thereby. The insurers providing the property insurance shall consent by endorsement on the policy or policies, but the property insurance shall not be canceled or permitted to lapse on account of any such partial use or occupancy.

Copyright © 2002 National Society of Professional Engineers for EJCDC. All rights reserved.

ARTICLE 6 – CONTRACTOR'S RESPONSIBILITIES

6.01 *Supervision and Superintendence*

A. Contractor shall supervise, inspect, and direct the Work competently and efficiently, devoting such attention thereto and applying such skills and expertise as may be necessary to perform the Work in accordance with the Contract Documents. Contractor shall be solely responsible for the means, methods, techniques, sequences, and procedures of construction. Contractor shall not be responsible for the negligence of Owner or Engineer in the design or specification of a specific means, method, technique, sequence, or procedure of construction which is shown or indicated in and expressly required by the Contract Documents.

B. At all times during the progress of the Work, Contractor shall assign a competent resident superintendent who shall not be replaced without written notice to Owner and Engineer except under extraordinary circumstances. The superintendent will be Contractor's representative at the Site and shall have authority to act on behalf of Contractor. All communications given to or received from the superintendent shall be binding on Contractor.

6.02 *Labor; Working Hours*

A. Contractor shall provide competent, suitably qualified personnel to survey and lay out the Work and perform construction as required by the Contract Documents. Contractor shall at all times maintain good discipline and order at the Site.

B. Except as otherwise required for the safety or protection of persons or the Work or property at the Site or adjacent thereto, and except as otherwise stated in the Contract Documents, all Work at the Site shall be performed during regular working hours. Contractor will not permit the performance of Work on a Saturday, Sunday, or any legal holiday without Owner's written consent (which will not be unreasonably withheld) given after prior written notice to Engineer.

6.03 *Services, Materials, and Equipment*

A. Unless otherwise specified in the Contract Documents, Contractor shall provide and assume full responsibility for all services, materials, equipment, labor, transportation, construction equipment and machinery, tools, appliances, fuel, power, light, heat, telephone, water, sanitary facilities, temporary facilities, and all other facilities and incidentals necessary for the performance, testing, start-up, and completion of the Work.

B. All materials and equipment incorporated into the Work shall be as specified or, if not specified, shall be of good quality and new, except as otherwise provided in the Contract Documents. All special warranties and guarantees required by the Specifications shall expressly run to the benefit of Owner. If required by Engineer, Contractor shall furnish satisfactory evidence (including reports of required tests) as to the source, kind, and quality of materials and equipment.

C. All materials and equipment shall be stored, applied, installed, connected, erected, protected, used, cleaned, and conditioned in accordance with instructions of the applicable Supplier, except as otherwise may be provided in the Contract Documents.

6.04 *Progress Schedule*

A. Contractor shall adhere to the Progress Schedule established in accordance with Paragraph 2.07 as it may be adjusted from time to time as provided below.

1. Contractor shall submit to Engineer for acceptance (to the extent indicated in Paragraph 2.07) proposed adjustments in the Progress Schedule that will not result in changing the Contract Times. Such adjustments will comply with any provisions of the General Requirements applicable thereto.

Copyright © 2002 National Society of Professional Engineers for EJCDC. All rights reserved.

2. Proposed adjustments in the Progress Schedule that will change the Contract Times shall be submitted in accordance with the requirements of Article 12. Adjustments in Contract Times may only be made by a Change Order.

6.05 *Substitutes and "Or-Equals"*

A. Whenever an item of material or equipment is specified or described in the Contract Documents by using the name of a proprietary item or the name of a particular Supplier, the specification or description is intended to establish the type, function, appearance, and quality required. Unless the specification or description contains or is followed by words reading that no like, equivalent, or "or-equal" item or no substitution is permitted, other items of material or equipment or material or equipment of other Suppliers may be submitted to Engineer for review under the circumstances described below.

1. *"Or-Equal" Items:* If in Engineer's sole discretion an item of material or equipment proposed by Contractor is functionally equal to that named and sufficiently similar so that no change in related Work will be required, it may be considered by Engineer as an "or-equal" item, in which case review and approval of the proposed item may, in Engineer's sole discretion, be accomplished without compliance with some or all of the requirements for approval of proposed substitute items. For the purposes of this Paragraph 6.05.A.1, a proposed item of material or equipment will be considered functionally equal to an item so named if:

a. in the exercise of reasonable judgment Engineer determines that:

1) it is at least equal in materials of construction, quality, durability, appearance, strength, and design characteristics;

2) it will reliably perform at least equally well the function and achieve the results imposed by the design concept of the completed Project as a functioning whole,

3) it has a proven record of performance and availability of responsive service; and

b. Contractor certifies that, if approved and incorporated into the Work:

1) there will be no increase in cost to the Owner or increase in Contract Times, and

2) it will conform substantially to the detailed requirements of the item named in the Contract Documents.

2. Substitute Items

a. If in Engineer's sole discretion an item of material or equipment proposed by Contractor does not qualify as an "or-equal" item under Paragraph 6.05.A.1, it will be considered a proposed substitute item.

b. Contractor shall submit sufficient information as provided below to allow Engineer to determine that the item of material or equipment proposed is essentially equivalent to that named and an acceptable substitute therefor. Requests for review of proposed substitute items of material or equipment will not be accepted by Engineer from anyone other than Contractor.

c. The requirements for review by Engineer will be as set forth in Paragraph 6.05.A.2.d, as supplemented in the General Requirements and as Engineer may decide is appropriate under the circumstances.

d. Contractor shall make written application to Engineer for review of a proposed substitute item of material or equipment that Contractor seeks to furnish or use. The application:

1) shall certify that the proposed substitute item will:

Copyright © 2002 National Society of Professional Engineers for EJCDC. All rights reserved.

a) perform adequately the functions and achieve the results called for by the general design,

b) be similar in substance to that specified, and

c) be suited to the same use as that specified;

2) will state:

a) the extent, if any, to which the use of the proposed substitute item will prejudice Contractor's achievement of Substantial Completion on time;

b) whether or not use of the proposed substitute item in the Work will require a change in any of the Contract Documents (or in the provisions of any other direct contract with Owner for other work on the Project) to adapt the design to the proposed substitute item; and

c) whether or not incorporation or use of the proposed substitute item in connection with the Work is subject to payment of any license fee or royalty;

3) will identify:

a) all variations of the proposed substitute item from that specified, and

b) available engineering, sales, maintenance, repair, and replacement services;

4) and shall contain an itemized estimate of all costs or credits that will result directly or indirectly from use of such substitute item, including costs of redesign and claims of other contractors affected by any resulting change,

B. *Substitute Construction Methods or Procedures:* If a specific means, method, technique, sequence, or procedure of construction is expressly required by the Contract Documents, Contractor may furnish or utilize a substitute means, method, technique, sequence, or procedure of construction approved by Engineer. Contractor shall submit sufficient information to allow Engineer, in Engineer's sole discretion, to determine that the substitute proposed is equivalent to that expressly called for by the Contract Documents. The requirements for review by Engineer will be similar to those provided in Paragraph 6.05.A.2.

C. *Engineer's Evaluation:* Engineer will be allowed a reasonable time within which to evaluate each proposal or submittal made pursuant to Paragraphs 6.05.A and 6.05.B. Engineer may require Contractor to furnish additional data about the proposed substitute item. Engineer will be the sole judge of acceptability. No "or equal" or substitute will be ordered, installed or utilized until Engineer's review is complete, which will be evidenced by either a Change Order for a substitute or an approved Shop Drawing for an "or equal." Engineer will advise Contractor in writing of any negative determination.

D. *Special Guarantee:* Owner may require Contractor to furnish at Contractor's expense a special performance guarantee or other surety with respect to any substitute.

E. *Engineer's Cost Reimbursement*: Engineer will record Engineer's costs in evaluating a substitute proposed or submitted by Contractor pursuant to Paragraphs 6.05.A.2 and 6.05.B Whether or not Engineer approves a substitute item so proposed or submitted by Contractor, Contractor shall reimburse Owner for the charges of Engineer for evaluating each such proposed substitute. Contractor shall also reimburse Owner for the charges of Engineer for making changes in the Contract Documents (or in the provisions of any other direct contract with Owner) resulting from the acceptance of each proposed substitute.

F. *Contractor's Expense*: Contractor shall provide all data in support of any proposed substitute or "or-equal" at Contractor's expense.

Copyright © 2002 National Society of Professional Engineers for EJCDC. All rights reserved.

6.06 *Concerning Subcontractors, Suppliers, and Others*

A. Contractor shall not employ any Subcontractor, Supplier, or other individual or entity (including those acceptable to Owner as indicated in Paragraph 6.06.B), whether initially or as a replacement, against whom Owner may have reasonable objection. Contractor shall not be required to employ any Subcontractor, Supplier, or other individual or entity to furnish or perform any of the Work against whom Contractor has reasonable objection.

B. If the Supplementary Conditions require the identity of certain Subcontractors, Suppliers, or other individuals or entities to be submitted to Owner in advance for acceptance by Owner by a specified date prior to the Effective Date of the Agreement, and if Contractor has submitted a list thereof in accordance with the Supplementary Conditions, Owner's acceptance (either in writing or by failing to make written objection thereto by the date indicated for acceptance or objection in the Bidding Documents or the Contract Documents) of any such Subcontractor, Supplier, or other individual or entity so identified may be revoked on the basis of reasonable objection after due investigation. Contractor shall submit an acceptable replacement for the rejected Subcontractor, Supplier, or other individual or entity, and the Contract Price will be adjusted by the difference in the cost occasioned by such replacement, and an appropriate Change Order will be issued . No acceptance by Owner of any such Subcontractor, Supplier, or other individual or entity, whether initially or as a replacement, shall constitute a waiver of any right of Owner or Engineer to reject defective Work.

C. Contractor shall be fully responsible to Owner and Engineer for all acts and omissions of the Subcontractors, Suppliers, and other individuals or entities performing or furnishing any of the Work just as Contractor is responsible for Contractor's own acts and omissions. Nothing in the Contract Documents:

1. shall create for the benefit of any such Subcontractor, Supplier, or other individual or entity any contractual relationship between Owner or Engineer and any such Subcontractor, Supplier or other individual or entity, nor

2. shall anything in the Contract Documents create any obligation on the part of Owner or Engineer to pay or to see to the payment of any moneys due any such Subcontractor, Supplier, or other individual or entity except as may otherwise be required by Laws and Regulations.

D. Contractor shall be solely responsible for scheduling and coordinating the Work of Subcontractors, Suppliers, and other individuals or entities performing or furnishing any of the Work under a direct or indirect contract with Contractor.

E. Contractor shall require all Subcontractors, Suppliers, and such other individuals or entities performing or furnishing any of the Work to communicate with Engineer through Contractor.

F. The divisions and sections of the Specifications and the identifications of any Drawings shall not control Contractor in dividing the Work among Subcontractors or Suppliers or delineating the Work to be performed by any specific trade.

G. All Work performed for Contractor by a Subcontractor or Supplier will be pursuant to an appropriate agreement between Contractor and the Subcontractor or Supplier which specifically binds the Subcontractor or Supplier to the applicable terms and conditions of the Contract Documents for the benefit of Owner and Engineer. Whenever any such agreement is with a Subcontractor or Supplier who is listed as an additional insured on the property insurance provided in Paragraph 5.06, the agreement between the Contractor and the Subcontractor or Supplier will contain provisions whereby the Subcontractor or Supplier waives all rights against Owner, Contractor, and Engineer,, and all other individuals or entities identified in the Supplementary Conditions to be listed as insureds or additional insureds (and the officers, directors, partners, employees, agents, consultants and subcontractors of each and any of them) for all losses and damages caused by, arising out of, relating to, or resulting from any of the perils or causes of loss covered by such policies and any other property insurance applicable to the Work. If the insurers on any such policies require separate waiver forms to be signed by any Subcontractor or Supplier, Contractor will obtain the same.

Copyright © 2002 National Society of Professional Engineers for EJCDC. All rights reserved.

6.07 *Patent Fees and Royalties*

A. Contractor shall pay all license fees and royalties and assume all costs incident to the use in the performance of the Work or the incorporation in the Work of any invention, design, process, product, or device which is the subject of patent rights or copyrights held by others. If a particular invention, design, process, product, or device is specified in the Contract Documents for use in the performance of the Work and if to the actual knowledge of Owner or Engineer its use is subject to patent rights or copyrights calling for the payment of any license fee or royalty to others, the existence of such rights shall be disclosed by Owner in the Contract Documents.

B. To the fullest extent permitted by Laws and Regulations, Contractor shall indemnify and hold harmless Owner and Engineer, and the officers, directors, partners, employees, agents, consultants and subcontractors of each and any of them from and against all claims, costs, losses, and damages (including but not limited to all fees and charges of engineers, architects, attorneys, and other professionals and all court or arbitration or other dispute resolution costs) arising out of or relating to any infringement of patent rights or copyrights incident to the use in the performance of the Work or resulting from the incorporation in the Work of any invention, design, process, product, or device not specified in the Contract Documents.

6.08 *Permits*

A. Unless otherwise provided in the Supplementary Conditions, Contractor shall obtain and pay for all construction permits and licenses. Owner shall assist Contractor, when necessary, in obtaining such permits and licenses. Contractor shall pay all governmental charges and inspection fees necessary for the prosecution of the Work which are applicable at the time of opening of Bids, or, if there are no Bids, on the Effective Date of the Agreement. Owner shall pay all charges of utility owners for connections for providing permanent service to the Work.

6.09 *Laws and Regulations*

A. Contractor shall give all notices required by and shall comply with all Laws and Regulations applicable to the performance of the Work. Except where otherwise expressly required by applicable Laws and Regulations, neither Owner nor Engineer shall be responsible for monitoring Contractor's compliance with any Laws or Regulations.

B. If Contractor performs any Work knowing or having reason to know that it is contrary to Laws or Regulations, Contractor shall bear all claims, costs, losses, and damages (including but not limited to all fees and charges of engineers, architects, attorneys, and other professionals and all court or arbitration or other dispute resolution costs) arising out of or relating to such Work. However, it shall not be Contractor's primary responsibility to make certain that the Specifications and Drawings are in accordance with Laws and Regulations, but this shall not relieve Contractor of Contractor's obligations under Paragraph 3.03.

C. Changes in Laws or Regulations not known at the time of opening of Bids (or, on the Effective Date of the Agreement if there were no Bids) having an effect on the cost or time of performance of the Work shall be the subject of an adjustment in Contract Price or Contract Times. If Owner and Contractor are unable to agree on entitlement to or on the amount or extent, if any, of any such adjustment, a Claim may be made therefor as provided in Paragraph 10.05.

6.10 *Taxes*

A. Contractor shall pay all sales, consumer, use, and other similar taxes required to be paid by Contractor in accordance with the Laws and Regulations of the place of the Project which are applicable during the performance of the Work.

Copyright © 2002 National Society of Professional Engineers for EJCDC. All rights reserved.

6.11 *Use of Site and Other Areas*

A. Limitation on Use of Site and Other Areas

1. Contractor shall confine construction equipment, the storage of materials and equipment, and the operations of workers to the Site and other areas permitted by Laws and Regulations, and shall not unreasonably encumber the Site and other areas with construction equipment or other materials or equipment. Contractor shall assume full responsibility for any damage to any such land or area, or to the owner or occupant thereof, or of any adjacent land or areas resulting from the performance of the Work.

2. Should any claim be made by any such owner or occupant because of the performance of the Work, Contractor shall promptly settle with such other party by negotiation or otherwise resolve the claim by arbitration or other dispute resolution proceeding or at law.

3. To the fullest extent permitted by Laws and Regulations, Contractor shall indemnify and hold harmless Owner and Engineer, and the officers, directors, partners, employees, agents, consultants and subcontractors of each and any of them from and against all claims, costs, losses, and damages (including but not limited to all fees and charges of engineers, architects, attorneys, and other professionals and all court or arbitration or other dispute resolution costs) arising out of or relating to any claim or action, legal or equitable, brought by any such owner or occupant against Owner, Engineer, or any other party indemnified hereunder to the extent caused by or based upon Contractor's performance of the Work.

B. *Removal of Debris During Performance of the Work:* During the progress of the Work Contractor shall keep the Site and other areas free from accumulations of waste materials, rubbish, and other debris. Removal and disposal of such waste materials, rubbish, and other debris shall conform to applicable Laws and Regulations.

C. *Cleaning:* Prior to Substantial Completion of the Work Contractor shall clean the Site and the Work and make it ready for utilization by Owner. At the completion of the Work Contractor shall remove from the Site all tools, appliances, construction equipment and machinery, and surplus materials and shall restore to original condition all property not designated for alteration by the Contract Documents.

D. *Loading Structures:* Contractor shall not load nor permit any part of any structure to be loaded in any manner that will endanger the structure, nor shall Contractor subject any part of the Work or adjacent property to stresses or pressures that will endanger it.

6.12 *Record Documents*

A. Contractor shall maintain in a safe place at the Site one record copy of all Drawings, Specifications, Addenda, Change Orders, Work Change Directives, Field Orders, and written interpretations and clarifications in good order and annotated to show changes made during construction. These record documents together with all approved Samples and a counterpart of all approved Shop Drawings will be available to Engineer for reference. Upon completion of the Work, these record documents, Samples, and Shop Drawings will be delivered to Engineer for Owner.

6.13 *Safety and Protection*

A. Contractor shall be solely responsible for initiating, maintaining and supervising all safety precautions and programs in connection with the Work. Contractor shall take all necessary precautions for the safety of, and shall provide the necessary protection to prevent damage, injury or loss to:

1. all persons on the Site or who may be affected by the Work;

2. all the Work and materials and equipment to be incorporated therein, whether in storage on or off the Site; and

Copyright © 2002 National Society of Professional Engineers for EJCDC. All rights reserved.

3. other property at the Site or adjacent thereto, including trees, shrubs, lawns, walks, pavements, roadways, structures, utilities, and Underground Facilities not designated for removal, relocation, or replacement in the course of construction.

B. Contractor shall comply with all applicable Laws and Regulations relating to the safety of persons or property, or to the protection of persons or property from damage, injury, or loss; and shall erect and maintain all necessary safeguards for such safety and protection. Contractor shall notify owners of adjacent property and of Underground Facilities and other utility owners when prosecution of the Work may affect them, and shall cooperate with them in the protection, removal, relocation, and replacement of their property.

C. All damage, injury, or loss to any property referred to in Paragraph 6.13.A.2 or 6.13.A.3 caused, directly or indirectly, in whole or in part, by Contractor, any Subcontractor, Supplier, or any other individual or entity directly or indirectly employed by any of them to perform any of the Work, or anyone for whose acts any of them may be liable, shall be remedied by Contractor (except damage or loss attributable to the fault of Drawings or Specifications or to the acts or omissions of Owner or Engineer or, or anyone employed by any of them, or anyone for whose acts any of them may be liable, and not attributable, directly or indirectly, in whole or in part, to the fault or negligence of Contractor or any Subcontractor, Supplier, or other individual or entity directly or indirectly employed by any of them).

D. Contractor's duties and responsibilities for safety and for protection of the Work shall continue until such time as all the Work is completed and Engineer has issued a notice to Owner and Contractor in accordance with Paragraph 14.07.B that the Work is acceptable (except as otherwise expressly provided in connection with Substantial Completion).

6.14 *Safety Representative*

A. Contractor shall designate a qualified and experienced safety representative at the Site whose duties and responsibilities shall be the prevention of accidents and the maintaining and supervising of safety precautions and programs.

6.15 *Hazard Communication Programs*

A. Contractor shall be responsible for coordinating any exchange of material safety data sheets or other hazard communication information required to be made available to or exchanged between or among employers at the Site in accordance with Laws or Regulations.

6.16 *Emergencies*

A. In emergencies affecting the safety or protection of persons or the Work or property at the Site or adjacent thereto, Contractor is obligated to act to prevent threatened damage, injury, or loss. Contractor shall give Engineer prompt written notice if Contractor believes that any significant changes in the Work or variations from the Contract Documents have been caused thereby or are required as a result thereof. If Engineer determines that a change in the Contract Documents is required because of the action taken by Contractor in response to such an emergency, a Work Change Directive or Change Order will be issued.

6.17 *Shop Drawings and Samples*

A. Contractor shall submit Shop Drawings and Samples to Engineer for review and approval in accordance with the acceptable Schedule of Submittals (as required by Paragraph 2.07). Each submittal will be identified as Engineer may require.

1. *Shop Drawings*

a. Submit number of copies specified in the General Requirements.

Copyright © 2002 National Society of Professional Engineers for EJCDC. All rights reserved.

b. Data shown on the Shop Drawings will be complete with respect to quantities, dimensions, specified performance and design criteria, materials, and similar data to show Engineer the services, materials, and equipment Contractor proposes to provide and to enable Engineer to review the information for the limited purposes required by Paragraph 6.17.D.

2. *Samples:* Contractor shall also submit Samples to Engineer for review and approval in accordance with the acceptable schedule of Shop Drawings and Sample submittals.

a. Submit number of Samples specified in the Specifications.

b. Clearly identify each Sample as to material, Supplier, pertinent data such as catalog numbers, the use for which intended and other data as Engineer may require to enable Engineer to review the submittal for the limited purposes required by Paragraph 6.17.D.

B. Where a Shop Drawing or Sample is required by the Contract Documents or the Schedule of Submittals, any related Work performed prior to Engineer's review and approval of the pertinent submittal will be at the sole expense and responsibility of Contractor.

C. *Submittal Procedures*

1. Before submitting each Shop Drawing or Sample, Contractor shall have determined and verified:

a. all field measurements, quantities, dimensions, specified performance and design criteria, installation requirements, materials, catalog numbers, and similar information with respect thereto;

b. the suitability of all materials with respect to intended use, fabrication, shipping, handling, storage, assembly, and installation pertaining to the performance of the Work;

c. all information relative to Contractor's responsibilities for means, methods, techniques, sequences, and procedures of construction, and safety precautions and programs incident thereto; and

d. shall also have reviewed and coordinated each Shop Drawing or Sample with other Shop Drawings and Samples and with the requirements of the Work and the Contract Documents.

2. Each submittal shall bear a stamp or specific written certification that Contractor has satisfied Contractor's obligations under the Contract Documents with respect to Contractor's review and approval of that submittal.

3. With each submittal, Contractor shall give Engineer specific written notice of any variations, that the Shop Drawing or Sample may have from the requirements of the Contract Documents. This notice shall be both a written communication separate from the Shop Drawing's or Sample Submittal; and, in addition, by a specific notation made on each Shop Drawing or Sample submitted to Engineer for review and approval of each such variation.

D. *Engineer's Review*

1. Engineer will provide timely review of Shop Drawings and Samples in accordance with the Schedule of Submittals acceptable to Engineer. Engineer's review and approval will be only to determine if the items covered by the submittals will, after installation or incorporation in the Work, conform to the information given in the Contract Documents and be compatible with the design concept of the completed Project as a functioning whole as indicated by the Contract Documents.

2. Engineer's review and approval will not extend to means, methods, techniques, sequences, or procedures of construction (except where a particular means, method, technique, sequence, or procedure of construction is

Copyright © 2002 National Society of Professional Engineers for EJCDC. All rights reserved.

specifically and expressly called for by the Contract Documents) or to safety precautions or programs incident thereto. The review and approval of a separate item as such will not indicate approval of the assembly in which the item functions.

3. Engineer's review and approval shall not relieve Contractor from responsibility for any variation from the requirements of the Contract Documents unless Contractor has complied with the requirements of Paragraph 6.17.C.3 and Engineer has given written approval of each such variation by specific written notation thereof incorporated in or accompanying the Shop Drawing or Sample. Engineer's review and approval shall not relieve Contractor from responsibility for complying with the requirements of Paragraph 6.17.C.1.

E. *Resubmittal Procedures*

1. Contractor shall make corrections required by Engineer and shall return the required number of corrected copies of Shop Drawings and submit, as required, new Samples for review and approval. Contractor shall direct specific attention in writing to revisions other than the corrections called for by Engineer on previous submittals.

6.18 *Continuing the Work*

A. Contractor shall carry on the Work and adhere to the Progress Schedule during all disputes or disagreements with Owner. No Work shall be delayed or postponed pending resolution of any disputes or disagreements, except as permitted by Paragraph 15.04 or as Owner and Contractor may otherwise agree in writing.

6.19 *Contractor's General Warranty and Guarantee*

A. Contractor warrants and guarantees to Owner that all Work will be in accordance with the Contract Documents and will not be defective. Engineer and its Related Entities shall be entitled to rely on representation of Contractor's warranty and guarantee.

B. Contractor's warranty and guarantee hereunder excludes defects or damage caused by:

1. abuse, modification, or improper maintenance or operation by persons other than Contractor, Subcontractors, Suppliers, or any other individual or entity for whom Contractor is responsible; or

2. normal wear and tear under normal usage.

C. Contractor's obligation to perform and complete the Work in accordance with the Contract Documents shall be absolute. None of the following will constitute an acceptance of Work that is not in accordance with the Contract Documents or a release of Contractor's obligation to perform the Work in accordance with the Contract Documents:

1. observations by Engineer;

2. recommendation by Engineer or payment by Owner of any progress or final payment;

3. the issuance of a certificate of Substantial Completion by Engineer or any payment related thereto by Owner;

4. use or occupancy of the Work or any part thereof by Owner;

5. any review and approval of a Shop Drawing or Sample submittal or the issuance of a notice of acceptability by Engineer;

6. any inspection, test, or approval by others; or

Copyright © 2002 National Society of Professional Engineers for EJCDC. All rights reserved.

7. any correction of defective Work by Owner.

6.20 *Indemnification*

A. To the fullest extent permitted by Laws and Regulations, Contractor shall indemnify and hold harmless Owner and Engineer, and the officers, directors, partners, employees, agents, consultants and subcontractors of each and any of them from and against all claims, costs, losses, and damages (including but not limited to all fees and charges of engineers, architects, attorneys, and other professionals and all court or arbitration or other dispute resolution costs) arising out of or relating to the performance of the Work, provided that any such claim, cost, loss, or damage is attributable to bodily injury, sickness, disease, or death, or to injury to or destruction of tangible property (other than the Work itself), including the loss of use resulting therefrom but only to the extent caused by any negligent act or omission of Contractor, any Subcontractor, any Supplier, or any individual or entity directly or indirectly employed by any of them to perform any of the Work or anyone for whose acts any of them may be liable .

B. In any and all claims against Owner or Engineer or any of their respective consultants, agents, officers, directors, partners, or employees by any employee (or the survivor or personal representative of such employee) of Contractor, any Subcontractor, any Supplier, or any individual or entity directly or indirectly employed by any of them to perform any of the Work, or anyone for whose acts any of them may be liable, the indemnification obligation under Paragraph 6.20.A shall not be limited in any way by any limitation on the amount or type of damages, compensation, or benefits payable by or for Contractor or any such Subcontractor, Supplier, or other individual or entity under workers' compensation acts, disability benefit acts, or other employee benefit acts.

C. The indemnification obligations of Contractor under Paragraph 6.20.A shall not extend to the liability of Engineer and Engineer's officers, directors, partners, employees, agents, consultants and subcontractors arising out of:

1. the preparation or approval of, or the failure to prepare or approve, maps, Drawings, opinions, reports, surveys, Change Orders, designs, or Specifications; or

2. giving directions or instructions, or failing to give them, if that is the primary cause of the injury or damage.

6.21 *Delegation of Professional Design Services*

A. Contractor will not be required to provide professional design services unless such services are specifically required by the Contract Documents for a portion of the Work or unless such services are required to carry out Contractor's responsibilities for construction means, methods, techniques, sequences and procedures. Contractor shall not be required to provide professional services in violation of applicable law.

B. If professional design services or certifications by a design professional related to systems, materials or equipment are specifically required of Contractor by the Contract Documents, Owner and Engineer will specify all performance and design criteria that such services must satisfy. Contractor shall cause such services or certifications to be provided by a properly licensed professional, whose signature and seal shall appear on all drawings, calculations, specifications, certifications, Shop Drawings and other submittals prepared by such professional. Shop Drawings and other submittals related to the Work designed or certified by such professional, if prepared by others, shall bear such professional's written approval when submitted to Engineer.

C. Owner and Engineer shall be entitled to rely upon the adequacy, accuracy and completeness of the services, certifications or approvals performed by such design professionals, provided Owner and Engineer have specified to Contractor all performance and design criteria that such services must satisfy.

D. Pursuant to this Paragraph 6.21, Engineer's review and approval of design calculations and design drawings will be only for the limited purpose of checking for conformance with performance and design criteria given and the design concept expressed in the Contract Documents. Engineer's review and approval of Shop Drawings and

Copyright © 2002 National Society of Professional Engineers for EJCDC. All rights reserved.

other submittals (except design calculations and design drawings) will be only for the purpose stated in Paragraph 6.17.D.1.

E. Contractor shall not be responsible for the adequacy of the performance or design criteria required by the Contract Documents.

ARTICLE 7 – OTHER WORK AT THE SITE

7.01 *Related Work at Site*

A. Owner may perform other work related to the Project at the Site with Owner's employees, or via other direct contracts therefor, or have other work performed by utility owners. If such other work is not noted in the Contract Documents, then:

1. written notice thereof will be given to Contractor prior to starting any such other work; and

2. if Owner and Contractor are unable to agree on entitlement to or on the amount or extent, if any, of any adjustment in the Contract Price or Contract Times that should be allowed as a result of such other work, a Claim may be made therefor as provided in Paragraph 10.05.

B. Contractor shall afford each other contractor who is a party to such a direct contract, each utility owner and Owner, if Owner is performing other work with Owner's employees, proper and safe access to the Site, a reasonable opportunity for the introduction and storage of materials and equipment and the execution of such other work, and shall properly coordinate the Work with theirs. Contractor shall do all cutting, fitting, and patching of the Work that may be required to properly connect or otherwise make its several parts come together and properly integrate with such other work. Contractor shall not endanger any work of others by cutting, excavating, or otherwise altering their work and will only cut or alter their work with the written consent of Engineer and the others whose work will be affected. The duties and responsibilities of Contractor under this Paragraph are for the benefit of such utility owners and other contractors to the extent that there are comparable provisions for the benefit of Contractor in said direct contracts between Owner and such utility owners and other contractors.

C. If the proper execution or results of any part of Contractor's Work depends upon work performed by others under this Article 7, Contractor shall inspect such other work and promptly report to Engineer in writing any delays, defects, or deficiencies in such other work that render it unavailable or unsuitable for the proper execution and results of Contractor's Work. Contractor's failure to so report will constitute an acceptance of such other work as fit and proper for integration with Contractor's Work except for latent defects and deficiencies in such other work.

7.02 *Coordination*

A. If Owner intends to contract with others for the performance of other work on the Project at the Site, the following will be set forth in Supplementary Conditions:

1. the individual or entity who will have authority and responsibility for coordination of the activities among the various contractors will be identified;

2. the specific matters to be covered by such authority and responsibility will be itemized; and

3. the extent of such authority and responsibilities will be provided.

B. Unless otherwise provided in the Supplementary Conditions, Owner shall have sole authority and responsibility for such coordination.

Copyright © 2002 National Society of Professional Engineers for EJCDC. All rights reserved.

7.03 *Legal Relationships*

A. Paragraphs 7.01.A and 7.02 are not applicable for utilities not under the control of Owner.

B. Each other direct contract of Owner under Paragraph 7.01.A shall provide that the other contractor is liable to Owner and Contractor for the reasonable direct delay and disruption costs incurred by Contractor as a result of the other contractor's actions or inactions.

C. Contractor shall be liable to Owner and any other contractor for the reasonable direct delay and disruption costs incurred by such other contractor as a result of Contractor's action or inactions.

ARTICLE 8 – OWNER'S RESPONSIBILITIES

8.01 *Communications to Contractor*

A. Except as otherwise provided in these General Conditions, Owner shall issue all communications to Contractor through Engineer.

8.02 *Replacement of Engineer*

A. In case of termination of the employment of Engineer, Owner shall appoint an engineer to whom Contractor makes no reasonable objection, whose status under the Contract Documents shall be that of the former Engineer.

8.03 *Furnish Data*

A. Owner shall promptly furnish the data required of Owner under the Contract Documents.

8.04 *Pay When Due*

A. Owner shall make payments to Contractor when they are due as provided in Paragraphs 14.02.C and 14.07.C.

8.05 *Lands and Easements; Reports and Tests*

A. Owner's duties in respect of providing lands and easements and providing engineering surveys to establish reference points are set forth in Paragraphs 4.01 and 4.05. Paragraph 4.02 refers to Owner's identifying and making available to Contractor copies of reports of explorations and tests of subsurface conditions and drawings of physical conditions in or relating to existing surface or subsurface structures at or contiguous to the Site that have been utilized by Engineer in preparing the Contract Documents.

8.06 *Insurance*

A. Owner's responsibilities, if any, in respect to purchasing and maintaining liability and property insurance are set forth in Article 5.

8.07 *Change Orders*

A. Owner is obligated to execute Change Orders as indicated in Paragraph 10.03.

8.08 *Inspections, Tests, and Approvals*

A. Owner's responsibility in respect to certain inspections, tests, and approvals is set forth in Paragraph 13.03.B.

Copyright © 2002 National Society of Professional Engineers for EJCDC. All rights reserved.

8.09 *Limitations on Owner's Responsibilities*

A. The Owner shall not supervise, direct, or have control or authority over, nor be responsible for, Contractor's means, methods, techniques, sequences, or procedures of construction, or the safety precautions and programs incident thereto, or for any failure of Contractor to comply with Laws and Regulations applicable to the performance of the Work. Owner will not be responsible for Contractor's failure to perform the Work in accordance with the Contract Documents.

8.10 *Undisclosed Hazardous Environmental Condition*

A. Owner's responsibility in respect to an undisclosed Hazardous Environmental Condition is set forth in Paragraph 4.06.

8.11 *Evidence of Financial Arrangements*

A. If and to the extent Owner has agreed to furnish Contractor reasonable evidence that financial arrangements have been made to satisfy Owner's obligations under the Contract Documents, Owner's responsibility in respect thereof will be as set forth in the Supplementary Conditions.

ARTICLE 9 – ENGINEER'S STATUS DURING CONSTRUCTION

9.01 *Owner's Representative*

A. Engineer will be Owner's representative during the construction period. The duties and responsibilities and the limitations of authority of Engineer as Owner's representative during construction are set forth in the Contract Documents and will not be changed without written consent of Owner and Engineer.

9.02 *Visits to Site*

A. Engineer will make visits to the Site at intervals appropriate to the various stages of construction as Engineer deems necessary in order to observe as an experienced and qualified design professional the progress that has been made and the quality of the various aspects of Contractor's executed Work. Based on information obtained during such visits and observations, Engineer, for the benefit of Owner, will determine, in general, if the Work is proceeding in accordance with the Contract Documents. Engineer will not be required to make exhaustive or continuous inspections on the Site to check the quality or quantity of the Work. Engineer's efforts will be directed toward providing for Owner a greater degree of confidence that the completed Work will conform generally to the Contract Documents. On the basis of such visits and observations, Engineer will keep Owner informed of the progress of the Work and will endeavor to guard Owner against defective Work.

B. Engineer's visits and observations are subject to all the limitations on Engineer's authority and responsibility set forth in Paragraph 9.09. Particularly, but without limitation, during or as a result of Engineer's visits or observations of Contractor's Work Engineer will not supervise, direct, control, or have authority over or be responsible for Contractor's means, methods, techniques, sequences, or procedures of construction, or the safety precautions and programs incident thereto, or for any failure of Contractor to comply with Laws and Regulations applicable to the performance of the Work.

9.03 *Project Representative*

A. If Owner and Engineer agree, Engineer will furnish a Resident Project Representative to assist Engineer in providing more extensive observation of the Work. The authority and responsibilities of any such Resident Project Representative and assistants will be as provided in the Supplementary Conditions, and limitations on the responsibilities thereof will be as provided in Paragraph 9.09. If Owner designates another representative or agent to represent Owner at the Site who is not Engineer's consultant, agent or emp loyee, the responsibilities

Copyright © 2002 National Society of Professional Engineers for EJCDC. All rights reserved.

and authority and limitations thereon of such other individual or entity will be as provided in the Supplementary Conditions.

9.04 *Authorized Variations in Work*

A. Engineer may authorize minor variations in the Work from the requirements of the Contract Documents which do not involve an adjustment in the Contract Price or the Contract Times and are compatible with the design concept of the completed Project as a functioning whole as indicated by the Contract Documents. These may be accomplished by a Field Order and will be binding on Owner and also on Contractor, who shall perform the Work involved promptly. If Owner or Contractor believes that a Field Order justifies an adjustment in the Contract Price or Contract Times, or both, and the parties are unable to agree on entitlement to or on the amount or extent, if any, of any such adjustment, a Claim may be made therefor as provided in Paragraph 10.05.

9.05 *Rejecting Defective Work*

A. Engineer will have authority to reject Work which Engineer believes to be defective, or that Engineer believes will not produce a completed Project that conforms to the Contract Documents or that will prejudice the integrity of the design concept of the completed Project as a functioning whole as indicated by the Contract Documents. Engineer will also have authority to require special inspection or testing of the Work as provided in Paragraph 13.04, whether or not the Work is fabricated, installed, or completed.

9.06 *Shop Drawings, Change Orders and Payments*

A. In connection with Engineer's authority, and limitations thereof, as to Shop Drawings and Samples, see Paragraph 6.17.

B. In connection with Engineer's authority, and limitations thereof, as to design calculations and design drawings submitted in response to a delegation of professional design services, if any, see Paragraph 6.21.

C. In connection with Engineer's authority as to Change Orders, see Articles 10, 11, and 12.

D. In connection with Engineer's authority as to Applications for Payment, see Article 14.

9.07 *Determinations for Unit Price Work*

A. Engineer will determine the actual quantities and classifications of Unit Price Work performed by Contractor. Engineer will review with Contractor the Engineer's preliminary determinations on such matters before rendering a written decision thereon (by recommendation of an Application for Payment or otherwise). Engineer's written decision thereon will be final and binding (except as modified by Engineer to reflect changed factual conditions or more accurate data) upon Owner and Contractor, subject to the provisions of Paragraph 10.05.

9.08 *Decisions on Requirements of Contract Documents and Acceptability of Work*

A. Engineer will be the initial interpreter of the requirements of the Contract Documents and judge of the acceptability of the Work thereunder. All matters in question and other matters between Owner and Contractor arising prior to the date final payment is due relating to the acceptability of the Work, and the interpretation of the requirements of the Contract Documents pertaining to the performance of the Work, will be referred initially to Engineer in writing within 30 days of the event giving rise to the question

B. Engineer will, with reasonable promptness, render a written decision on the issue referred. If Owner or Contractor believe that any such decision entitles them to an adjustment in the Contract Price or Contract Times or both, a Claim may be made under Paragraph 10.05. The date of Engineer's decision shall be the date of the event giving rise to the issues referenced for the purposes of Paragraph 10.05.B.

Copyright © 2002 National Society of Professional Engineers for EJCDC. All rights reserved.

C. Engineer's written decision on the issue referred will be final and binding on Owner and Contractor, subject to the provisions of Paragraph 10.05.

D. When functioning as interpreter and judge under this Paragraph 9.08, Engineer will not show partiality to Owner or Contractor and will not be liable in connection with any interpretation or decision rendered in good faith in such capacity.

9.09 *Limitations on Engineer's Authority and Responsibilities*

A. Neither Engineer's authority or responsibility under this Article 9 or under any other provision of the Contract Documents nor any decision made by Engineer in good faith either to exercise or not exercise such authority or responsibility or the undertaking, exercise, or performance of any authority or responsibility by Engineer shall create, impose, or give rise to any duty in contract, tort, or otherwise owed by Engineer to Contractor, any Subcontractor, any Supplier, any other individual or entity, or to any surety for or employee or agent of any of them.

B. Engineer will not supervise, direct, control, or have authority over or be responsible for Contractor's means, methods, techniques, sequences, or procedures of construction, or the safety precautions and programs incident thereto, or for any failure of Contractor to comply with Laws and Regulations applicable to the performance of the Work. Engineer will not be responsible for Contractor's failure to perform the Work in accordance with the Contract Documents.

C. Engineer will not be responsible for the acts or omissions of Contractor or of any Subcontractor, any Supplier, or of any other individual or entity performing any of the Work.

D. Engineer's review of the final Application for Payment and accompanying documentation and all maintenance and operating instructions, schedules, guarantees, bonds, certificates of inspection, tests and approvals, and other documentation required to be delivered by Paragraph 14.07.A will only be to determine generally that their content complies with the requirements of, and in the case of certificates of inspections, tests, and approvals that the results certified indicate compliance with the Contract Documents.

E. The limitations upon authority and responsibility set forth in this Paragraph 9.09 shall also apply to, the Resident Project Representative, if any, and assistants, if any.

ARTICLE 10 – CHANGES IN THE WORK; CLAIMS

10.01 *Authorized Changes in the Work*

A. Without invalidating the Contract and without notice to any surety, Owner may, at any time or from time to time, order additions, deletions, or revisions in the Work by a Change Order, or a Work Change Directive. Upon receipt of any such document, Contractor shall promptly proceed with the Work involved which will be performed under the applicable conditions of the Contract Documents (except as otherwise specifically provided).

B. If Owner and Contractor are unable to agree on entitlement to, or on the amount or extent, if any, of an adjustment in the Contract Price or Contract Times, or both, that should be allowed as a result of a Work Change Directive, a Claim may be made therefor as provided in Paragraph 10.05.

10.02 *Unauthorized Changes in the Work*

A. Contractor shall not be entitled to an increase in the Contract Price or an extension of the Contract Times with respect to any work performed that is not required by the Contract Documents as amended, modified, or supplemented as provided in Paragraph 3.04, except in the case of an emergency as provided in Paragraph 6.16 or in the case of uncovering Work as provided in Paragraph 13.04.B.

Copyright © 2002 National Society of Professional Engineers for EJCDC. All rights reserved.

10.03 *Execution of Change Orders*

A. Owner and Contractor shall execute appropriate Change Orders recommended by Engineer covering:

1. changes in the Work which are: (i) ordered by Owner pursuant to Paragraph 10.01.A, (ii) required because of acceptance of defective Work under Paragraph 13.08.A or Owner's correction of defective Work under Paragraph 13.09, or (iii) agreed to by the parties;

2. changes in the Contract Price or Contract Times which are agreed to by the parties, including any undisputed sum or amount of time for Work actually performed in accordance with a Work Change Directive; and

3. changes in the Contract Price or Contract Times which embody the substance of any written decision rendered by Engineer pursuant to Paragraph 10.05; provided that, in lieu of executing any such Change Order, an appeal may be taken from any such decision in accordance with the provisions of the Contract Documents and applicable Laws and Regulations, but during any such appeal, Contractor shall carry on the Work and adhere to the Progress Schedule as provided in Paragraph 6.18.A.

10.04 *Notification to Surety*

A. If notice of any change affecting the general scope of the Work or the provisions of the Contract Documents (including, but not limited to, Contract Price or Contract Times) is required by the provisions of any bond to be given to a surety, the giving of any such notice will be Contractor's responsibility. The amount of each applicable bond will be adjusted to reflect the effect of any such change.

10.05 *Claims*

A. *Engineer's Decision Required*: All Claims, except those waived pursuant to Paragraph 14.09, shall be referred to the Engineer for decision. A decision by Engineer shall be required as a condition precedent to any exercise by Owner or Contractor of any rights or remedies either may otherwise have under the Contract Documents or by Laws and Regulations in respect of such Claims.

B. *Notice:* Written notice stating the general nature of each Claim, shall be delivered by the claimant to Engineer and the other party to the Contract promptly (but in no event later than 30 days) after the start of the event giving rise thereto. The responsibility to substantiate a Claim shall rest with the party making the Claim. Notice of the amount or extent of the Claim, with supporting data shall be delivered to the Engineer and the other party to the Contract within 60 days after the start of such event (unless Engineer allows additional time for claimant to submit additional or more accurate data in support of such Claim). A Claim for an adjustment in Contract Price shall be prepared in accordance with the provisions of Paragraph 12.01.B. A Claim for an adjustment in Contract Time shall be prepared in accordance with the provisions of Paragraph 12.02.B. Each Claim shall be accompanied by claimant's written statement that the adjustment claimed is the entire adjustment to which the claimant believes it is entitled as a result of said event. The opposing party shall submit any response to Engineer and the claimant within 30 days after receipt of the claimant's last submittal (unless Engineer allows additional time).

C. *Engineer's Action*: Engineer will review each Claim and, within 30 days after receipt of the last submittal of the claimant or the last submittal of the opposing party, if any, take one of the following actions in writing:

1. deny the Claim in whole or in part,

2. approve the Claim, or

3. notify the parties that the Engineer is unable to resolve the Claim if, in the Engineer's sole discretion, it would be inappropriate for the Engineer to do so. For purposes of further resolution of the Claim, such notice shall be deemed a denial.

Copyright © 2002 National Society of Professional Engineers for EJCDC. All rights reserved.

D. In the event that Engineer does not take action on a Claim within said 30 days, the Claim shall be deemed denied.

E. Engineer's written action under Paragraph 10.05.C or denial pursuant to Paragraphs 10.05.C.3 or 10.05.D will be final and binding upon Owner and Contractor, unless Owner or Contractor invoke the dispute resolution procedure set forth in Article 16 within 30 days of such action or denial.

F. No Claim for an adjustment in Contract Price or Contract Times will be valid if not submitted in accordance with this Paragraph 10.05.

ARTICLE 11 – COST OF THE WORK; ALLOWANCES; UNIT PRICE WORK

11.01 *Cost of the Work*

A. *Costs Included:* The term Cost of the Work means the sum of all costs, except those excluded in Paragraph 11.01.B, necessarily incurred and paid by Contractor in the proper performance of the Work. When the value of any Work covered by a Change Order or when a Claim for an adjustment in Contract Price is determined on the basis of Cost of the Work, the costs to be reimbursed to Contractor will be only those additional or incremental costs required because of the change in the Work or because of the event giving rise to the Claim. Except as otherwise may be agreed to in writing by Owner, such costs shall be in amounts no higher than those prevailing in the locality of the Project, shall include only the following items, and shall not include any of the costs itemized in Paragraph 11.01.B.

1. Payroll costs for employees in the direct employ of Contractor in the performance of the Work under schedules of job classifications agreed upon by Owner and Contractor. Such employees shall include, without limitation, superintendents, foremen, and other personnel employed full time at the Site. Payroll costs for employees not employed full time on the Work shall be apportioned on the basis of their time spent on the Work. Payroll costs shall include, but not be limited to, salaries and wages plus the cost of fringe benefits, which shall include social security contributions, unemployment, excise, and payroll taxes, workers' compensation, health and retirement benefits, bonuses, sick leave, vacation and holiday pay applicable thereto. The expenses of performing Work outside of regular working hours, on Saturday, Sunday, or legal holidays, shall be included in the above to the extent authorized by Owner.

2. Cost of all materials and equipment furnished and incorporated in the Work, including costs of transportation and storage thereof, and Suppliers' field services required in connection therewith. All cash discounts shall accrue to Contractor unless Owner deposits funds with Contractor with which to make payments, in which case the cash discounts shall accrue to Owner. All trade discounts, rebates and refunds and returns from sale of surplus materials and equipment shall accrue to Owner, and Contractor shall make provisions so that they may be obtained.

3. Payments made by Contractor to Subcontractors for Work performed by Subcontractors. If required by Owner, Contractor shall obtain competitive bids from subcontractors acceptable to Owner and Contractor and shall deliver such bids to Owner, who will then determine, with the advice of Engineer, which bids, if any, will be acceptable. If any subcontract provides that the Subcontractor is to be paid on the basis of Cost of the Work plus a fee, the Subcontractor's Cost of the Work and fee shall be determined in the same manner as Contractor's Cost of the Work and fee as provided in this Paragraph 11.01.

4. Costs of special consultants (including but not limited to Engineers, architects, testing laboratories, surveyors, attorneys, and accountants) employed for services specifically related to the Work.

5. Supplemental costs including the following:

   a. The proportion of necessary transportation, travel, and subsistence expenses of Contractor's employees incurred in discharge of duties connected with the Work.

Copyright © 2002 National Society of Professional Engineers for EJCDC. All rights reserved.

b. Cost, including transportation and maintenance, of all materials, supplies, equipment, machinery, appliances, office, and temporary facilities at the Site, and hand tools not owned by the workers, which are consumed in the performance of the Work, and cost, less market value, of such items used but not consumed which remain the property of Contractor.

c. Rentals of all construction equipment and machinery, and the parts thereof whether rented from Contractor or others in accordance with rental agreements approved by Owner with the advice of Engineer, and the costs of transportation, loading, unloading, assembly, dismantling, and removal thereof. All such costs shall be in accordance with the terms of said rental agreements. The rental of any such equipment, machinery, or parts shall cease when the use thereof is no longer necessary for the Work.

d. Sales, consumer, use, and other similar taxes related to the Work, and for which Contractor is liable, imposed by Laws and Regulations.

e. Deposits lost for causes other than negligence of Contractor, any Subcontractor, or anyone directly or indirectly employed by any of them or for whose acts any of them may be liable, and royalty payments and fees for permits and licenses.

f. Losses and damages (and related expenses) caused by damage to the Work, not compensated by insurance or otherwise, sustained by Contractor in connection with the performance of the Work (except losses and damages within the deductible amounts of property insurance established in accordance with Paragraph 5.06.D), provided such losses and damages have resulted from causes other than the negligence of Contractor, any Subcontractor, or anyone directly or indirectly employed by any of them or for whose acts any of them may be liable. Such losses shall include settlements made with the written consent and approval of Owner. No such losses, damages, and expenses shall be included in the Cost of the Work for the purpose of determining Contractor's fee.

g. The cost of utilities, fuel, and sanitary facilities at the Site.

h. Minor expenses such as telegrams, long distance telephone calls, telephone service at the Site, expresses, and similar petty cash items in connection with the Work.

i. The costs of premiums for all bonds and insurance Contractor is required by the Contract Documents to purchase and maintain.

B. *Costs Excluded:* The term Cost of the Work shall not include any of the following items:

1. Payroll costs and other compensation of Contractor's officers, executives, principals (of partnerships and sole proprietorships), general managers, safety managers, engineers, architects, estimators, attorneys, auditors, accountants, purchasing and contracting agents, expediters, timekeepers, clerks, and other personnel employed by Contractor, whether at the Site or in Contractor's principal or branch office for general administration of the Work and not specifically included in the agreed upon schedule of job classifications referred to in Paragraph 11.01.A.1 or specifically covered by Paragraph 11.01.A.4, all of which are to be considered administrative costs covered by the Contractor's fee.

2. Expenses of Contractor's principal and branch offices other than Contractor's office at the Site.

3. Any part of Contractor's capital expenses, including interest on Contractor's capital employed for the Work and charges against Contractor for delinquent payments.

4. Costs due to the negligence of Contractor, any Subcontractor, or anyone directly or indirectly employed by any of them or for whose acts any of them may be liable, including but not limited to, the correction of

Copyright © 2002 National Society of Professional Engineers for EJCDC. All rights reserved.

defective Work, disposal of materials or equipment wrongly supplied, and making good any damage to property.

5. Other overhead or general expense costs of any kind and the costs of any item not specifically and expressly included in Paragraphs 11.01.A and 11.01.B.

C. *Contractor's Fee:* When all the Work is performed on the basis of cost-plus, Contractor's fee shall be determined as set forth in the Agreement. When the value of any Work covered by a Change Order or when a Claim for an adjustment in Contract Price is determined on the basis of Cost of the Work, Contractor's fee shall be determined as set forth in Paragraph 12.01.C.

D. *Documentation:* Whenever the Cost of the Work for any purpose is to be determined pursuant to Paragraphs 11.01.A and 11.01.B, Contractor will establish and maintain records thereof in accordance with generally accepted accounting practices and submit in a form acceptable to Engineer an itemized cost breakdown together with supporting data.

11.02 *Allowances*

A. It is understood that Contractor has included in the Contract Price all allowances so named in the Contract Documents and shall cause the Work so covered to be performed for such sums and by such persons or entities as may be acceptable to Owner and Engineer.

B. *Cash Allowances*

1. Contractor agrees that:

a. the cash allowances include the cost to Contractor (less any applicable trade discounts) of materials and equipment required by the allowances to be delivered at the Site, and all applicable taxes; and

b. Contractor's costs for unloading and handling on the Site, labor, installation, overhead, profit, and other expenses contemplated for the cash allowances have been included in the Contract Price and not in the allowances, and no demand for additional payment on account of any of the foregoing will be valid.

C. *Contingency Allowance*

1. Contractor agrees that a contingency allowance, if any, is for the sole use of Owner to cover unanticipated costs.

D. Prior to final payment, an appropriate Change Order will be issued as recommended by Engineer to reflect actual amounts due Contractor on account of Work covered by allowances, and the Contract Price shall be correspondingly adjusted.

11.03 *Unit Price Work*

A. Where the Contract Documents provide that all or part of the Work is to be Unit Price Work, initially the Contract Price will be deemed to include for all Unit Price Work an amount equal to the sum of the unit price for each separately identified item of Unit Price Work times the estimated quantity of each item as indicated in the Agreement.

B. The estimated quantities of items of Unit Price Work are not guaranteed and are solely for the purpose of comparison of Bids and determining an initial Contract Price. Determinations of the actual quantities and classifications of Unit Price Work performed by Contractor will be made by Engineer subject to the provisions of Paragraph 9.07.

Copyright © 2002 National Society of Professional Engineers for EJCDC. All rights reserved.

C. Each unit price will be deemed to include an amount considered by Contractor to be adequate to cover Contractor's overhead and profit for each separately identified item.

D. Owner or Contractor may make a Claim for an adjustment in the Contract Price in accordance with Paragraph 10.05 if:

1. the quantity of any item of Unit Price Work performed by Contractor differs materially and significantly from the estimated quantity of such item indicated in the Agreement; and

2. there is no corresponding adjustment with respect any other item of Work; and

3. Contractor believes that Contractor is entitled to an increase in Contract Price as a result of having incurred additional expense or Owner believes that Owner is entitled to a decrease in Contract Price and the parties are unable to agree as to the amount of any such increase or decrease.

ARTICLE 12 – CHANGE OF CONTRACT PRICE; CHANGE OF CONTRACT TIMES

12.01 *Change of Contract Price*

A. The Contract Price may only be changed by a Change Order. Any Claim for an adjustment in the Contract Price shall be based on written notice submitted by the party making the Claim to the Engineer and the other party to the Contract in accordance with the provisions of Paragraph 10.05.

B. The value of any Work covered by a Change Order or of any Claim for an adjustment in the Contract Price will be determined as follows:

1. where the Work involved is covered by unit prices contained in the Contract Documents, by application of such unit prices to the quantities of the items involved (subject to the provisions of Paragraph 11.03); or

2. where the Work involved is not covered by unit prices contained in the Contract Documents, by a mutually agreed lump sum (which may include an allowance for overhead and profit not necessarily in accordance with Paragraph 12.01.C.2); or

3. where the Work involved is not covered by unit prices contained in the Contract Documents and agreement to a lump sum is not reached under Paragraph 12.01.B.2, on the basis of the Cost of the Work (determined as provided in Paragraph 11.01) plus a Contractor's fee for overhead and profit (determined as provided in Paragraph 12.01.C).

C. *Contractor's Fee:* The Contractor's fee for overhead and profit shall be determined as follows:

1. a mutually acceptable fixed fee; or

2. if a fixed fee is not agreed upon, then a fee based on the following percentages of the various portions of the Cost of the Work:

a. for costs incurred under Paragraphs 11.01.A.1 and 11.01.A.2, the Contractor's fee shall be 15 percent;

b. for costs incurred under Paragraph 11.01.A.3, the Contractor's fee shall be five percent;

c. where one or more tiers of subcontracts are on the basis of Cost of the Work plus a fee and no fixed fee is agreed upon, the intent of Paragraph 12.01.C.2.a is that the Subcontractor who actually performs the Work, at whatever tier, will be paid a fee of 15 percent of the costs incurred by such Subcontractor under Paragraphs 11.01.A.1 and 11.01.A.2 and that any higher tier Subcontractor and Contractor will each be paid a fee of five percent of the amount paid to the next lower tier Subcontractor;

Copyright © 2002 National Society of Professional Engineers for EJCDC. All rights reserved.

d. no fee shall be payable on the basis of costs itemized under Paragraphs 11.01.A.4, 11.01.A.5, and 11.01.B;

e. the amount of credit to be allowed by Contractor to Owner for any change which results in a net decrease in cost will be the amount of the actual net decrease in cost plus a deduction in Contractor's fee by an amount equal to five percent of such net decrease; and

f. when both additions and credits are involved in any one change, the adjustment in Contractor's fee shall be computed on the basis of the net change in accordance with Paragraphs 12.01.C.2.a through 12.01.C.2.e, inclusive.

12.02 *Change of Contract Times*

A. The Contract Times may only be changed by a Change Order. Any Claim for an adjustment in the Contract Times shall be based on written notice submitted by the party making the Claim to the Engineer and the other party to the Contract in accordance with the provisions of Paragraph 10.05.

B. Any adjustment of the Contract Times covered by a Change Order or any Claim for an adjustment in the Contract Times will be determined in accordance with the provisions of this Article 12.

12.03 *Delays*

A. Where Contractor is prevented from completing any part of the Work within the Contract Times due to delay beyond the control of Contractor, the Contract Times will be extended in an amount equal to the time lost due to such delay if a Claim is made therefor as provided in Paragraph 12.02.A. Delays beyond the control of Contractor shall include, but not be limited to, acts or neglect by Owner, acts or neglect of utility owners or other contractors performing other work as contemplated by Article 7, fires, floods, epidemics, abnormal weather conditions, or acts of God.

B. If Owner, Engineer, or other contractors or utility owners performing other work for Owner as contemplated by Article 7, or anyone for whom Owner is responsible, delays, disrupts, or interferes with the performance or progress of the Work, then Contractor shall be entitled to an equitable adjustment in the Contract Price or the Contract Times, or both. Contractor's entitlement to an adjustment of the Contract Times is conditioned on such adjustment being essential to Contractor's ability to complete the Work within the Contract Times.

C. If Contractor is delayed in the performance or progress of the Work by fire, flood, epidemic, abnormal weather conditions, acts of God, acts or failures to act of utility owners not under the control of Owner, or other causes not the fault of and beyond control of Owner and Contractor, then Contractor shall be entitled to an equitable adjustment in Contract Times, if such adjustment is essential to Contractor's ability to complete the Work within the Contract Times. Such an adjustment shall be Contractor's sole and exclusive remedy for the delays described in this Paragraph 12.03.C.

D. Owner, Engineer and the Related Entities of each of them shall not be liable to Contractor for any claims, costs, losses, or damages (including but not limited to all fees and charges of Engineers, architects, attorneys, and other professionals and all court or arbitration or other dispute resolution costs) sustained by Contractor on or in connection with any other project or anticipated project.

E. Contractor shall not be entitled to an adjustment in Contract Price or Contract Times for delays within the control of Contractor. Delays attributable to and within the control of a Subcontractor or Supplier shall be deemed to be delays within the control of Contractor.

Copyright © 2002 National Society of Professional Engineers for EJCDC. All rights reserved.

ARTICLE 13 – TESTS AND INSPECTIONS; CORRECTION, REMOVAL OR ACCEPTANCE OF DEFECTIVE WORK

13.01 *Notice of Defects*

A. Prompt notice of all defective Work of which Owner or Engineer has actual knowledge will be given to Contractor. All defective Work may be rejected, corrected, or accepted as provided in this Article 13.

13.02 *Access to Work*

A. Owner, Engineer, their consultants and other representatives and personnel of Owner, independent testing laboratories, and governmental agencies with jurisdictional interests will have access to the Site and the Work at reasonable times for their observation, inspecting, and testing. Contractor shall provide them proper and safe conditions for such access and advise them of Contractor's Site safety procedures and programs so that they may comply therewith as applicable.

13.03 *Tests and Inspections*

A. Contractor shall give Engineer timely notice of readiness of the Work for all required inspections, tests, or approvals and shall cooperate with inspection and testing personnel to facilitate required inspections or tests.

B. Owner shall employ and pay for the services of an independent testing laboratory to perform all inspections, tests, or approvals required by the Contract Documents except:

1. for inspections, tests, or approvals covered by Paragraphs 13.03.C and 13.03.D below;

2. that costs incurred in connection with tests or inspections conducted pursuant to Paragraph 13.04.B shall be paid as provided in said Paragraph 13.04.C; and

3. as otherwise specifically provided in the Contract Documents.

C. If Laws or Regulations of any public body having jurisdiction require any Work (or part thereof) specifically to be inspected, tested, or approved by an employee or other representative of such public body, Contractor shall assume full responsibility for arranging and obtaining such inspections, tests, or approvals, pay all costs in connection therewith, and furnish Engineer the required certificates of inspection or approval.

D. Contractor shall be responsible for arranging and obtaining and shall pay all costs in connection with any inspections, tests, or approvals required for Owner's and Engineer's acceptance of materials or equipment to be incorporated in the Work; or acceptance of materials, mix designs, or equipment submitted for approval prior to Contractor's purchase thereof for incorporation in the Work. Such inspections, tests, or approvals shall be performed by organizations acceptable to Owner and Engineer.

E. If any Work (or the work of others) that is to be inspected, tested, or approved is covered by Contractor without written concurrence of Engineer, it must, if requested by Engineer, be uncovered for observation.

F. Uncovering Work as provided in Paragraph 13.03.E shall be at Contractor's expense unless Contractor has given Engineer timely notice of Contractor's intention to cover the same and Engineer has not acted with reasonable promptness in response to such notice.

13.04 *Uncovering Work*

A. If any Work is covered contrary to the written request of Engineer, it must, if requested by Engineer, be uncovered for Engineer's observation and replaced at Contractor's expense.

Copyright © 2002 National Society of Professional Engineers for EJCDC. All rights reserved.

B. If Engineer considers it necessary or advisable that covered Work be observed by Engineer or inspected or tested by others, Contractor, at Engineer's request, shall uncover, expose, or otherwise make available for observation, inspection, or testing as Engineer may require, that portion of the Work in question, furnishing all necessary labor, material, and equipment.

C. If it is found that the uncovered Work is defective, Contractor shall pay all claims, costs, losses, and damages (including but not limited to all fees and charges of engineers, architects, attorneys, and other professionals and all court or arbitration or other dispute resolution costs) arising out of or relating to such uncovering, exposure, observation, inspection, and testing, and of satisfactory replacement or reconstruction (including but not limited to all costs of repair or replacement of work of others); and Owner shall be entitled to an appropriate decrease in the Contract Price. If the parties are unable to agree as to the amount thereof, Owner may make a Claim therefor as provided in Paragraph 10.05.

D. If, the uncovered Work is not found to be defective, Contractor shall be allowed an increase in the Contract Price or an extension of the Contract Times, or both, directly attributable to such uncovering, exposure, observation, inspection, testing, replacement, and reconstruction. If the parties are unable to agree as to the amount or extent thereof, Contractor may make a Claim therefor as provided in Paragraph 10.05.

13.05 *Owner May Stop the Work*

A. If the Work is defective, or Contractor fails to supply sufficient skilled workers or suitable materials or equipment, or fails to perform the Work in such a way that the completed Work will conform to the Contract Documents, Owner may order Contractor to stop the Work, or any portion thereof, until the cause for such order has been eliminated; however, this right of Owner to stop the Work shall not give rise to any duty on the part of Owner to exercise this right for the benefit of Contractor, any Subcontractor, any Supplier, any other individual or entity, or any surety for, or employee or agent of any of them.

13.06 *Correction or Removal of Defective Work*

A. Promptly after receipt of notice, Contractor shall correct all defective Work, whether or not fabricated, installed, or completed, or, if the Work has been rejected by Engineer, remove it from the Project and replace it with Work that is not defective. Contractor shall pay all claims, costs, losses, and damages (including but not limited to all fees and charges of engineers, architects, attorneys, and other professionals and all court or arbitration or other dispute resolution costs) arising out of or relating to such correction or removal (including but not limited to all costs of repair or replacement of work of others).

B. When correcting defective Work under the terms of this Paragraph 13.06 or Paragraph 13.07, Contractor shall take no action that would void or otherwise impair Owner's special warranty and guarantee, if any, on said Work.

13.07 *Correction Period*

A. If within one year after the date of Substantial Completion (or such longer period of time as may be prescribed by the terms of any applicable special guarantee required by the Contract Documents) or by any specific provision of the Contract Documents, any Work is found to be defective, or if the repair of any damages to the land or areas made available for Contractor's use by Owner or permitted by Laws and Regulations as contemplated in Paragraph 6.11.A is found to be defective, Contractor shall promptly, without cost to Owner and in accordance with Owner's written instructions:

1. repair such defective land or areas; or

2. correct such defective Work; or

3. if the defective Work has been rejected by Owner, remove it from the Project and replace it with Work that is not defective, and

Copyright © 2002 National Society of Professional Engineers for EJCDC. All rights reserved.

4. satisfactorily correct or repair or remove and replace any damage to other Work, to the work of others or other land or areas resulting therefrom.

B. If Contractor does not promptly comply with the terms of Owner's written instructions, or in an emergency where delay would cause serious risk of loss or damage, Owner may have the defective Work corrected or repaired or may have the rejected Work removed and replaced. All claims, costs, losses, and damages (including but not limited to all fees and charges of engineers, architects, attorneys, and other professionals and all court or arbitration or other dispute resolution costs) arising out of or relating to such correction or repair or such removal and replacement (including but not limited to all costs of repair or replacement of work of others) will be paid by Contractor.

C. In special circumstances where a particular item of equipment is placed in continuous service before Substantial Completion of all the Work, the correction period for that item may start to run from an earlier date if so provided in the Specifications .

D. Where defective Work (and damage to other Work resulting therefrom) has been corrected or removed and replaced under this Paragraph 13.07, the correction period hereunder with respect to such Work will be extended for an additional period of one year after such correction or removal and replacement has been satisfactorily completed.

E. Contractor's obligations under this Paragraph 13.07 are in addition to any other obligation or warranty. The provisions of this Paragraph 13.07 shall not be construed as a substitute for or a waiver of the provisions of any applicable statute of limitation or repose.

13.08 *Acceptance of Defective Work*

A. If, instead of requiring correction or removal and replacement of defective Work, Owner (and, prior to Engineer's recommendation of final payment, Engineer) prefers to accept it, Owner may do so. Contractor shall pay all claims, costs, losses, and damages (including but not limited to all fees and charges of engineers, architects, attorneys, and other professionals and all court or arbitration or other dispute resolution costs) attributable to Owner's evaluation of and determination to accept such defective Work (such costs to be approved by Engineer as to reasonableness) and the diminished value of the Work to the extent not otherwise paid by Contractor pursuant to this sentence. If any such acceptance occurs prior to Engineer's recommendation of final payment, a Change Order will be issued incorporating the necessary revisions in the Contract Documents with respect to the Work, and Owner shall be entitled to an appropriate decrease in the Contract Price, reflecting the diminished value of Work so accepted. If the parties are unable to agree as to the amount thereof, Owner may make a Claim therefor as provided in Paragraph 10.05. If the acceptance occurs after such recommendation, an appropriate amount will be paid by Contractor to Owner.

13.09 *Owner May Correct Defective Work*

A. If Contractor fails within a reasonable time after written notice from Engineer to correct defective Work or to remove and replace rejected Work as required by Engineer in accordance with Paragraph 13.06.A, or if Contractor fails to perform the Work in accordance with the Contract Documents, or if Contractor fails to comply with any other provision of the Contract Documents, Owner may, after seven days written notice to Contractor, correct or remedy any such deficiency.

B. In exercising the rights and remedies under this Paragraph 13.09, Owner shall proceed expeditiously. In connection with such corrective or remedial action, Owner may exclude Contractor from all or part of the Site, take possession of all or part of the Work and suspend Contractor's services related thereto, take possession of Contractor's tools, appliances, construction equipment and machinery at the Site, and incorporate in the Work all materials and equipment stored at the Site or for which Owner has paid Contractor but which are stored elsewhere. Contractor shall allow Owner, Owner's representatives, agents and employees, Owner's other

Copyright © 2002 National Society of Professional Engineers for EJCDC. All rights reserved.

contractors, and Engineer and Engineer's consultants access to the Site to enable Owner to exercise the rights and remedies under this Paragraph.

C. All claims, costs, losses, and damages (including but not limited to all fees and charges of engineers, architects, attorneys, and other professionals and all court or arbitration or other dispute resolution costs) incurred or sustained by Owner in exercising the rights and remedies under this Paragraph 13.09 will be charged against Contractor, and a Change Order will be issued incorporating the necessary revisions in the Contract Documents with respect to the Work; and Owner shall be entitled to an appropriate decrease in the Contract Price. If the parties are unable to agree as to the amount of the adjustment, Owner may make a Claim therefor as provided in Paragraph 10.05. Such claims, costs, losses and damages will include but not be limited to all costs of repair, or replacement of work of others destroyed or damaged by correction, removal, or replacement of Contractor's defective Work.

D. Contractor shall not be allowed an extension of the Contract Times because of any delay in the performance of the Work attributable to the exercise by Owner of Owner's rights and remedies under this Paragraph 13.09.

ARTICLE 14 – PAYMENTS TO CONTRACTOR AND COMPLETION

14.01 *Schedule of Values*

A. The Schedule of Values established as provided in Paragraph 2.07.A will serve as the basis for progress payments and will be incorporated into a form of Application for Payment acceptable to Engineer. Progress payments on account of Unit Price Work will be based on the number of units completed.

14.02 *Progress Payments*

A. *Applications for Payments*

1. At least 20 days before the date established in the Agreement for each progress payment (but not more often than once a month), Contractor shall submit to Engineer for review an Application for Payment filled out and signed by Contractor covering the Work completed as of the date of the Application and accompanied by such supporting documentation as is required by the Contract Documents. If payment is requested on the basis of materials and equipment not incorporated in the Work but delivered and suitably stored at the Site or at another location agreed to in writing, the Application for Payment shall also be accompanied by a bill of sale, invoice, or other documentation warranting that Owner has received the materials and equipment free and clear of all Liens and evidence that the materials and equipment are covered by appropriate property insurance or other arrangements to protect Owner's interest therein, all of which must be satisfactory to Owner.

2. Beginning with the second Application for Payment, each Application shall include an affidavit of Contractor stating that all previous progress payments received on account of the Work have been applied on account to discharge Contractor's legitimate obligations associated with prior Applications for Payment.

3. The amount of retainage with respect to progress payments will be as stipulated in the Agreement.

B. *Review of Applications*

1. Engineer will, within 10 days after receipt of each Application for Payment, either indicate in writing a recommendation of payment and present the Application to Owner or return the Application to Contractor indicating in writing Engineer's reasons for refusing to recommend payment. In the latter case, Contractor may make the necessary corrections and resubmit the Application.

2. Engineer's recommendation of any payment requested in an Application for Payment will constitute a representation by Engineer to Owner, based on Engineer's observations on the Site of the executed Work as

Copyright © 2002 National Society of Professional Engineers for EJCDC. All rights reserved.

an experienced and qualified design professional and on Engineer's review of the Application for Payment and the accompanying data and schedules, that to the best of Engineer's knowledge, information and belief:

a. the Work has progressed to the point indicated;

b. the quality of the Work is generally in accordance with the Contract Documents (subject to an evaluation of the Work as a functioning whole prior to or upon Substantial Completion, to the results of any subsequent tests called for in the Contract Documents, to a final determination of quantities and classifications for Unit Price Work under Paragraph 9.07, and to any other qualifications stated in the recommendation); and

c. the conditions precedent to Contractor's being entitled to such payment appear to have been fulfilled in so far as it is Engineer's responsibility to observe the Work.

3. By recommending any such payment Engineer will not thereby be deemed to have represented that:

a. inspections made to check the quality or the quantity of the Work as it has been performed have been exhaustive, extended to every aspect of the Work in progress, or involved detailed inspections of the Work beyond the responsibilities specifically assigned to Engineer in the Contract Documents; or

b. that there may not be other matters or issues between the parties that might entitle Contractor to be paid additionally by Owner or entitle Owner to withhold payment to Contractor.

4. Neither Engineer's review of Contractor's Work for the purposes of recommending payments nor Engineer's recommendation of any payment, including final payment, will impose responsibility on Engineer:

a. to supervise, direct, or control the Work, or

b. for the means, methods, techniques, sequences, or procedures of construction, or the safety precautions and programs incident thereto, or

c. for Contractor's failure to comply with Laws and Regulations applicable to Contractor's performance of the Work, or

d. to make any examination to ascertain how or for what purposes Contractor has used the moneys paid on account of the Contract Price, or

e. to determine that title to any of the Work, materials, or equipment has passed to Owner free and clear of any Liens.

5. Engineer may refuse to recommend the whole or any part of any payment if, in Engineer's opinion, it would be incorrect to make the representations to Owner stated in Paragraph 14.02.B.2. Engineer may also refuse to recommend any such payment or, because of subsequently discovered evidence or the results of subsequent inspections or tests, revise or revoke any such payment recommendation previously made, to such extent as may be necessary in Engineer's opinion to protect Owner from loss because:

a. the Work is defective, or completed Work has been damaged, requiring correction or replacement;

b. the Contract Price has been reduced by Change Orders;

c. Owner has been required to correct defective Work or complete Work in accordance with Paragraph 13.09; or

d. Engineer has actual knowledge of the occurrence of any of the events enumerated in Paragraph 15.02.A.

Copyright © 2002 National Society of Professional Engineers for EJCDC. All rights reserved.

C. *Payment Becomes Due*

1. Ten days after presentation of the Application for Payment to Owner with Engineer's recommendation, the amount recommended will (subject to the provisions of Paragraph 14.02.D) become due, and when due will be paid by Owner to Contractor.

D. *Reduction in Payment*

1. Owner may refuse to make payment of the full amount recommended by Engineer because:

   a. claims have been made against Owner on account of Contractor's performance or furnishing of the Work;

   b. Liens have been filed in connection with the Work, except where Contractor has delivered a specific bond satisfactory to Owner to secure the satisfaction and discharge of such Liens;

   c. there are other items entitling Owner to a set-off against the amount recommended; or

   d. Owner has actual knowledge of the occurrence of any of the events enumerated in Paragraphs 14.02.B.5.a through 14.02.B.5.c or Paragraph 15.02.A.

2. If Owner refuses to make payment of the full amount recommended by Engineer, Owner will give Contractor immediate written notice (with a copy to Engineer) stating the reasons for such action and promptly pay Contractor any amount remaining after deduction of the amount so withheld. Owner shall promptly pay Contractor the amount so withheld, or any adjustment thereto agreed to by Owner and Contractor, when Contractor corrects to Owner's satisfaction the reasons for such action.

3. If it is subsequently determined that Owner's refusal of payment was not justified, the amount wrongfully withheld shall be treated as an amount due as determined by Paragraph 14.02.C.1.

14.03 *Contractor's Warranty of Title*

A. Contractor warrants and guarantees that title to all Work, materials, and equipment covered by any Application for Payment, whether incorporated in the Project or not, will pass to Owner no later than the time of payment free and clear of all Liens.

14.04 *Substantial Completion*

A. When Contractor considers the entire Work ready for its intended use Contractor shall notify Owner and Engineer in writing that the entire Work is substantially complete (except for items specifically listed by Contractor as incomplete) and request that Engineer issue a certificate of Substantial Completion.

B. Promptly after Contractor's notification,, Owner, Contractor, and Engineer shall make an inspection of the Work to determine the status of completion. If Engineer does not consider the Work substantially complete, Engineer will notify Contractor in writing giving the reasons therefor.

C. If Engineer considers the Work substantially complete, Engineer will deliver to Owner a tentative certificate of Substantial Completion which shall fix the date of Substantial Completion. There shall be attached to the certificate a tentative list of items to be completed or corrected before final payment. Owner shall have seven days after receipt of the tentative certificate during which to make written objection to Engineer as to any provisions of the certificate or attached list. If, after considering such objections, Engineer concludes that the Work is not substantially complete, Engineer will within 14 days after submission of the tentative certificate to Owner notify Contractor in writing, stating the reasons therefor. If, after consideration of Owner's objections, Engineer considers the Work substantially complete, Engineer will within said 14 days execute and deliver to

Copyright © 2002 National Society of Professional Engineers for EJCDC. All rights reserved.

Owner and Contractor a definitive certificate of Substantial Completion (with a revised tentative list of items to be completed or corrected) reflecting such changes from the tentative certificate as Engineer believes justified after consideration of any objections from Owner.

D. At the time of delivery of the tentative certificate of Substantial Completion, Engineer will deliver to Owner and Contractor a written recommendation as to division of responsibilities pending final payment between Owner and Contractor with respect to security, operation, safety, and protection of the Work, maintenance, heat, utilities, insurance, and warranties and guarantees. Unless Owner and Contractor agree otherwise in writing and so inform Engineer in writing prior to Engineer's issuing the definitive certificate of Substantial Completion, Engineer's aforesaid recommendation will be binding on Owner and Contractor until final payment.

E. Owner shall have the right to exclude Contractor from the Site after the date of Substantial Completion subject to allowing Contractor reasonable access to complete or correct items on the tentative list.

14.05 *Partial Utilization*

A. Prior to Substantial Completion of all the Work, Owner may use or occupy any substantially completed part of the Work which has specifically been identified in the Contract Documents, or which Owner, Engineer, and Contractor agree constitutes a separately functioning and usable part of the Work that can be used by Owner for its intended purpose without significant interference with Contractor's performance of the remainder of the Work, subject to the following conditions.

1. Owner at any time may request Contractor in writing to permit Owner to use or occupy any such part of the Work which Owner believes to be ready for its intended use and substantially complete. If and when Contractor agrees that such part of the Work is substantially complete, Contractor will certify to Owner and Engineer that such part of the Work is substantially complete and request Engineer to issue a certificate of Substantial Completion for that part of the Work.

2. Contractor at any time may notify Owner and Engineer in writing that Contractor considers any such part of the Work ready for its intended use and substantially complete and request Engineer to issue a certificate of Substantial Completion for that part of the Work.

3. Within a reasonable time after either such request, Owner, Contractor, and Engineer shall make an inspection of that part of the Work to determine its status of completion. If Engineer does not consider that part of the Work to be substantially complete, Engineer will notify Owner and Contractor in writing giving the reasons therefor. If Engineer considers that part of the Work to be substantially complete, the provisions of Paragraph 14.04 will apply with respect to certification of Substantial Completion of that part of the Work and the division of responsibility in respect thereof and access thereto.

4. No use or occupancy or separate operation of part of the Work may occur prior to compliance with the requirements of Paragraph 5.10 regarding property insurance.

14.06 *Final Inspection*

A. Upon written notice from Contractor that the entire Work or an agreed portion thereof is complete, Engineer will promptly make a final inspection with Owner and Contractor and will notify Contractor in writing of all particulars in which this inspection reveals that the Work is incomplete or defective. Contractor shall immediately take such measures as are necessary to complete such Work or remedy such deficiencies.

Copyright © 2002 National Society of Professional Engineers for EJCDC. All rights reserved.

14.07 *Final Payment*

A. *Application for Payment*

1. After Contractor has, in the opinion of Engineer, satisfactorily completed all corrections identified during the final inspection and has delivered, in accordance with the Contract Documents, all maintenance and operating instructions, schedules, guarantees, bonds, certificates or other evidence of insurance certificates of inspection, marked-up record documents (as provided in Paragraph 6.12), and other documents, Contractor may make application for final payment following the procedure for progress payments.

2. The final Application for Payment shall be accompanied (except as previously delivered) by:

a. all documentation called for in the Contract Documents, including but not limited to the evidence of insurance required by Paragraph 5.04.B.7;

b. consent of the surety, if any, to final payment;

c. a list of all Claims against Owner that Contractor believes are unsettled; and

d. complete and legally effective releases or waivers (satisfactory to Owner) of all Lien rights arising out of or Liens filed in connection with the Work.

3. In lieu of the releases or waivers of Liens specified in Paragraph 14.07.A.2 and as approved by Owner, Contractor may furnish receipts or releases in full and an affidavit of Contractor that: (i) the releases and receipts include all labor, services, material, and equipment for which a Lien could be filed; and (ii) all payrolls, material and equipment bills, and other indebtedness connected with the Work for which Owner or Owner's property might in any way be responsible have been paid or otherwise satisfied. If any Subcontractor or Supplier fails to furnish such a release or receipt in full, Contractor may furnish a bond or other collateral satisfactory to Owner to indemnify Owner against any Lien.

B. *Engineer's Review of Application and Acceptance*

1. If, on the basis of Engineer's observation of the Work during construction and final inspection, and Engineer's review of the final Application for Payment and accompanying documentation as required by the Contract Documents, Engineer is satisfied that the Work has been completed and Contractor's other obligations under the Contract Documents have been fulfilled, Engineer will, within ten days after receipt of the final Application for Payment, indicate in writing Engineer's recommendation of payment and present the Application for Payment to Owner for payment. At the same time Engineer will also give written notice to Owner and Contractor that the Work is acceptable subject to the provisions of Paragraph 14.09. Otherwise, Engineer will return the Application for Payment to Contractor, indicating in writing the reasons for refusing to recommend final payment, in which case Contractor shall make the necessary corrections and resubmit the Application for Payment.

C. *Payment Becomes Due*

1. Thirty days after the presentation to Owner of the Application for Payment and accompanying documentation, the amount recommended by Engineer, less any sum Owner is entitled to set off against Engineer's recommendation, including but not limited to liquidated damages, will become due and, will be paid by Owner to Contractor.

14.08 *Final Completion Delayed*

A. If, through no fault of Contractor, final completion of the Work is significantly delayed, and if Engineer so confirms, Owner shall, upon receipt of Contractor's final Application for Payment (for Work fully completed and

Copyright © 2002 National Society of Professional Engineers for EJCDC. All rights reserved.

accepted) and recommendation of Engineer, and without terminating the Contract, make payment of the balance due for that portion of the Work fully completed and accepted. If the remaining balance to be held by Owner for Work not fully completed or corrected is less than the retainage stipulated in the Agreement, and if bonds have been furnished as required in Paragraph 5.01, the written consent of the surety to the payment of the balance due for that portion of the Work fully completed and accepted shall be submitted by Contractor to Engineer with the Application for such payment. Such payment shall be made under the terms and conditions governing final payment, except that it shall not constitute a waiver of Claims.

14.09 *Waiver of Claims*

A. The making and acceptance of final payment will constitute:

1. a waiver of all Claims by Owner against Contractor, except Claims arising from unsettled Liens, from defective Work appearing after final inspection pursuant to Paragraph 14.06, from failure to comply with the Contract Documents or the terms of any special guarantees specified therein, or from Contractor's continuing obligations under the Contract Documents; and

2. a waiver of all Claims by Contractor against Owner other than those previously made in accordance with the requirements herein and expressly acknowledged by Owner in writing as still unsettled.

ARTICLE 15 – SUSPENSION OF WORK AND TERMINATION

15.01 *Owner May Suspend Work*

A. At any time and without cause, Owner may suspend the Work or any portion thereof for a period of not more than 90 consecutive days by notice in writing to Contractor and Engineer which will fix the date on which Work will be resumed. Contractor shall resume the Work on the date so fixed. Contractor shall be granted an adjustment in the Contract Price or an extension of the Contract Times, or both, directly attributable to any such suspension if Contractor makes a Claim therefor as provided in Paragraph 10.05.

15.02 *Owner May Terminate for Cause*

A. The occurrence of any one or more of the following events will justify termination for cause:

1. Contractor's persistent failure to perform the Work in accordance with the Contract Documents (including, but not limited to, failure to supply sufficient skilled workers or suitable materials or equipment or failure to adhere to the Progress Schedule established under Paragraph 2.07 as adjusted from time to time pursuant to Paragraph 6.04);

2. Contractor's disregard of Laws or Regulations of any public body having jurisdiction;

3. Contractor's disregard of the authority of Engineer; or

4. Contractor's violation in any substantial way of any provisions of the Contract Documents.

B. If one or more of the events identified in Paragraph 15.02.A occur, Owner may, after giving Contractor (and surety) seven days written notice of its intent to terminate the services of Contractor:

1. exclude Contractor from the Site, and take possession of the Work and of all Contractor's tools, appliances, construction equipment, and machinery at the Site, and use the same to the full extent they could be used by Contractor (without liability to Contractor for trespass or conversion),

2. incorporate in the Work all materials and equipment stored at the Site or for which Owner has paid Contractor but which are stored elsewhere, and

Copyright © 2002 National Society of Professional Engineers for EJCDC. All rights reserved.

3. complete the Work as Owner may deem expedient.

C. If Owner proceeds as provided in Paragraph 15.02.B, Contractor shall not be entitled to receive any further payment until the Work is completed. If the unpaid balance of the Contract Price exceeds all claims, costs, losses, and damages (including but not limited to all fees and charges of engineers, architects, attorneys, and other professionals and all court or arbitration or other dispute resolution costs) sustained by Owner arising out of or relating to completing the Work, such excess will be paid to Contractor. If such claims, costs, losses, and damages exceed such unpaid balance, Contractor shall pay the difference to Owner. Such claims, costs, losses, and damages incurred by Owner will be reviewed by Engineer as to their reasonableness and, when so approved by Engineer, incorporated in a Change Order. When exercising any rights or remedies under this Paragraph Owner shall not be required to obtain the lowest price for the Work performed.

D. Notwithstanding Paragraphs 15.02.B and 15.02.C, Contractor's services will not be terminated if Contractor begins within seven days of receipt of notice of intent to terminate to correct its failure to perform and proceeds diligently to cure such failure within no more than 30 days of receipt of said notice.

E. Where Contractor's services have been so terminated by Owner, the termination will not affect any rights or remedies of Owner against Contractor then existing or which may thereafter accrue. Any retention or payment of moneys due Contractor by Owner will not release Contractor from liability.

F. If and to the extent that Contractor has provided a performance bond under the provisions of Paragraph 5.01.A, the termination procedures of that bond shall supersede the provisions of Paragraphs 15.02.B, and 15.02.C.

15.03 *Owner May Terminate For Convenience*

A. Upon seven days written notice to Contractor and Engineer, Owner may, without cause and without prejudice to any other right or remedy of Owner, terminate the Contract. In such case, Contractor shall be paid for (without duplication of any items):

1. completed and acceptable Work executed in accordance with the Contract Documents prior to the effective date of termination, including fair and reasonable sums for overhead and profit on such Work;

2. expenses sustained prior to the effective date of termination in performing services and furnishing labor, materials, or equipment as required by the Contract Documents in connection with uncompleted Work, plus fair and reasonable sums for overhead and profit on such expenses;

3. all claims, costs, losses, and damages (including but not limited to all fees and charges of engineers, architects, attorneys, and other professionals and all court or arbitration or other dispute resolution costs) incurred in settlement of terminated contracts with Subcontractors, Suppliers, and others; and

4. reasonable expenses directly attributable to termination.

B. Contractor shall not be paid on account of loss of anticipated profits or revenue or other economic loss arising out of or resulting from such termination.

15.04 *Contractor May Stop Work or Terminate*

A. If, through no act or fault of Contractor, (i) the Work is suspended for more than 90 consecutive days by Owner or under an order of court or other public authority, or (ii) Engineer fails to act on any Application for Payment within 30 days after it is submitted, or (iii) Owner fails for 30 days to pay Contractor any sum finally determined to be due, then Contractor may, upon seven days written notice to Owner and Engineer, and provided Owner or Engineer do not remedy such suspension or failure within that time, terminate the Contract and recover from Owner payment on the same terms as provided in Paragraph 15.03.

Copyright © 2002 National Society of Professional Engineers for EJCDC. All rights reserved.

B. In lieu of terminating the Contract and without prejudice to any other right or remedy, if Engineer has failed to act on an Application for Payment within 30 days after it is submitted, or Owner has failed for 30 days to pay Contractor any sum finally determined to be due, Contractor may, seven days after written notice to Owner and Engineer, stop the Work until payment is made of all such amounts due Contractor, including interest thereon. The provisions of this Paragraph 15.04 are not intended to preclude Contractor from making a Claim under Paragraph 10.05 for an adjustment in Contract Price or Contract Times or otherwise for expenses or damage directly attributable to Contractor's stopping the Work as permitted by this Paragraph.

ARTICLE 16 – DISPUTE RESOLUTION

16.01 *Methods and Procedures*

A. Either Owner or Contractor may request mediation of any Claim submitted to Engineer for a decision under Paragraph 10.05 before such decision becomes final and binding. The mediation will be governed by the Construction Industry Mediation Rules of the American Arbitration Association in effect as of the Effective Date of the Agreement. The request for mediation shall be submitted in writing to the American Arbitration Association and the other party to the Contract. Timely submission of the request shall stay the effect of Paragraph 10.05.E.

B. Owner and Contractor shall participate in the mediation process in good faith. The process shall be concluded within 60 days of filing of the request. The date of termination of the mediation shall be determined by application of the mediation rules referenced above.

C. If the Claim is not resolved by mediation, Engineer's action under Paragraph 10.05.C or a denial pursuant to Paragraphs 10.05.C.3 or 10.05.D shall become final and binding 30 days after termination of the mediation unless, within that time period, Owner or Contractor:

1. elects in writing to invoke any dispute resolution process provided for in the Supplementary Conditions, or

2. agrees with the other party to submit the Claim to another dispute resolution process, or

3. gives written notice to the other party of their intent to submit the Claim to a court of competent jurisdiction.

ARTICLE 17 – MISCELLANEOUS

17.01 *Giving Notice*

A. Whenever any provision of the Contract Documents requires the giving of written notice, it will be deemed to have been validly given if:

1. delivered in person to the individual or to a member of the firm or to an officer of the corporation for whom it is intended, or

2. delivered at or sent by registered or certified mail, postage prepaid, to the last business address known to the giver of the notice.

17.02 *Computation of Times*

A. When any period of time is referred to in the Contract Documents by days, it will be computed to exclude the first and include the last day of such period. If the last day of any such period falls on a Saturday or Sunday or on a day made a legal holiday by the law of the applicable jurisdiction, such day will be omitted from the computation.

Copyright © 2002 National Society of Professional Engineers for EJCDC. All rights reserved.

17.03 *Cumulative Remedies*

A. The duties and obligations imposed by these General Conditions and the rights and remedies available hereunder to the parties hereto are in addition to, and are not to be construed in any way as a limitation of, any rights and remedies available to any or all of them which are otherwise imposed or available by Laws or Regulations, by special warranty or guarantee, or by other provisions of the Contract Documents. The provisions of this Paragraph will be as effective as if repeated specifically in the Contract Documents in connection with each particular duty, obligation, right, and remedy to which they apply.

17.04 *Survival of Obligations*

A. All representations, indemnifications, warranties, and guarantees made in, required by, or given in accordance with the Contract Documents, as well as all continuing obligations indicated in the Contract Documents, will survive final payment, completion, and acceptance of the Work or termination or completion of the Contract or termination of the services of Contractor.

17.05 *Controlling Law*

A. This Contract is to be governed by the law of the state in which the Project is located.

17.06 *Headings*

A. Article and paragraph headings are inserted for convenience only and do not constitute parts of these General Conditions.

Copyright © 2002 National Society of Professional Engineers for EJCDC. All rights reserved.

SECTION 4

SUPPLEMENTARY CONDITIONS

SECTION 4

SUPPLEMENTARY CONDITIONS

THESE SUPPLEMENTARY CONDITIONS are made a part of the Agreement between the OWNER and CONTRACTOR, to which the Parties agree as follows:

Section 1. Definitions. All Definitions found in the General Conditions are incorporated into these Supplementary Conditions by reference, and shall apply here. The following shall be modified to read:

Engineer:	Bruce A. Moia, P.E. MBV Engineering, Inc. 1250 W. Eau Gallie Blvd, Unit H Melbourne, FL 32935 (321) 253-1510	**Owner:**	Celebration Residential Owners Association, Inc. 851 Celebration Ave. Celebration, FL 34747 (407) 566-1200

Section 2. General Provisions. The following general provisions shall apply:

2.1 Any terms or provisions, which by the General conditions may be included in the "General Requirements," may also be included in these Supplementary Conditions, which shall be binding on the Parties.

2.2 Any "Written Amendment" or "Change Order" mandated by the General Conditions shall be executed by the Parties required to sign. If any Party fails or refuses to sign, the Party shall be in breach of this agreement.

2.3 Any reference in the General Conditions to "legal holiday" shall mean any holiday recognized as a legal holiday by the federal government.

2.4 If any provision in the General Conditions requires payment by a Party, and there is no general or specific time frame referenced for payment, payment shall be due promptly.

2.5 Any Paragraph reference in these Supplementary Conditions to a Paragraph number shall mean the paragraph number in the General Conditions, as amended by these Supplementary Conditions.

2.6 Any reference under this Agreement to an act of the CONTRACTOR shall include act of the CONTRACTOR'S employees, agents, contractors and suppliers.

2.7 This agreement replaces any other agreement previously entered into by and between the OWNER and CONTRACTOR.

2.8 The ENGINEER shall act as a liaison between the OWNER and the CONTRACTOR. The ENGINEER shall ensure that there is no unauthorized interference from CONTRACTOR and residents in the Development.

Section 3. Specific Provisions Modifying General Conditions. The following shall modify specific provisions in the General Conditions. Unless stated otherwise, a Paragraph or Article number shall refer to the General Conditions.

3.1 ARTICLE 2 - PRELIMINARY MATTERS

A. In the first line of Paragraph 2.02, A, change the term "...ten..." to read "...three...".

B. Delete paragraph 2.03 and replace with the following:

"2.03 The date of commencement of the Work is the date established in a Notice to Proceed, which shall be evidenced by a letter from the ENGINEER directing the CONTRACTOR to proceed."

C. Add the following to Paragraph 2.05A:

"4. Four sets of checked and approved product specifications, along with a transmittal letter to the ENGINEER. The ENGINEER shall have a minimum of two weeks from the date of receipt for review, which review will be general and will not relieve the CONTRACTOR from any responsibility under the AGREEMENT."

D. Add the following Paragraph 2.05B:

"1. CONTRACTOR shall perform no portion of the Work at any time without Contract Documents.

2. By executing the Contract, CONTRACTOR represents that he has visited the site, familiarized himself with the local conditions under which the Work is to be performed, and correlated his observations with the requirements of the Contract Documents."

3.2 ARTICLE 4 - AVAILABILITY OF LANDS; SUBSURFACE AND PHYSICAL CONDITIONS; REFERENCE POINTS

A. Add the following words after negligence and before the period on the last line of Paragraph 4.06G:

"or omissions or intentional acts."

3.3 ARTICLE 5 - BONDS AND INSURANCE

A. Payment Bonds. Paragraphs 5.01, 5.02, and 5.03 delete all references to payment bonds. The cost of the performance and maintenance bonds shall be furnished at no additional cost to the OWNER.

B. Limits of Insurance. Notwithstanding any provision contained in Paragraph 5.04 to the contrary, the limits of liability for the insurance required by Paragraph 5.04 shall provide the following coverages and in the following amounts:

Workers Compensation:

1.	State	Statutory
2.	Applicable Federal	Statutory
3.	Employer's Liability	

Comprehensive General Liability or Commercial General Liability, (including Premises-Operations, Product/Completed Operations, Contractor Protective)

Shall also include:
Personnel Injury, Broad Form Property Damage, Broad Form CGL Endorsement or Equivalent.

1.	Bodily Injury:	
	Each Occurrence	$1,000,000.00
	Aggregate	$2,000,000.00
2.	Property Damage:	
	Each Occurrence	$1,000,000.00
	Aggregate	$2,000,000.00
3.	Or Bodily Injury and Property Damage Combined Single Limit:	
	Each Occurrence	$1,000,000.00
	Aggregate	$2,000,000.00
4.	XCU Coverage:	YES

Comprehensive Automobile Liability
(Owner-leased-non-owned & hired)

1.	Bodily Injury:	
	Each Occurrence	$1,000,000.00
	Aggregate	$1,000,000.00
2.	Property Damage:	
	Each Occurrence	$1,000,000.00
	Aggregate	$1,000,000.00
3.	Or Bodily Injury and Property Damage Combined Single Limit:	
	Each Occurrence	$1,000,000.00
	Aggregate	$1,000,000.00

Contractual Liability Insurance: (which coverage may be included in the Comprehensive General Liability Policy described above.)

1.	Bodily Injury:	
	Each Occurrence	$1,000,000.00
	Aggregate	$2,000,000.00

2. Property Damage:

Each Occurrence	$1,000,000.00
Aggregate	$2,000,000.00

3. Or Bodily Injury and Property Damage Combined Single Limit:

Each Occurrence	$1,000,000.00
Aggregate	$2,000,000.00

4. XCU Coverage: YES

C. Additional Insured : Additional liability coverage for OWNER shall be provided by endorsement as an additional insured on CONTRACTOR'S General Liability Policy.

D. Property Insurance Provided by the OWNER. Notwithstanding any provision contained in Paragraphs 5.06 to the contrary, the following provisions shall apply:
Property insurance to the full insurable value of the Work in accordance with Paragraph 5.06 will be provided by the OWNER and will be by Completed Value of the Work. Such insurance will be subject to a deductible amount of $500.00 in accordance with Paragraph 5.06. The CONTRACTOR shall not be entitled to payment for portions of the work stored on and off the site or in transit, where such Work is damaged, unless the OWNER received insurance proceeds for any damaged Work from the policy maintained by the OWNER as required by Paragraph 5.06

Paragraph 5.06A.1 shall be deleted in its entirety and shall instead read as follows:

"5.06A.1 include only the OWNER as named insured."

E. Waiver of Rights Paragraph 5.07.B is deleted in its entirety.

F. Partial Utilization - Property Insurance Paragraph 5.10 is deleted in its entirety.

3.4 ARTICLE 6 - CONTRACTOR'S RESPONSIBILITIES

A. Add the following after Paragraph 6.01A:

"6.01.A.a CONTRACTOR shall be responsible for the construction and coordination of the parts, and all systems shall be completely compatible and fully functional without additional cost to the OWNER.

B. Add the following to the end of Paragraph 6.03.A:

"6.03.A.a. The CONTRACTOR shall be responsible to provide the water required for the project. The cost of utilizing fire hydrant(s) which require metering devices shall be borne by the CONTRACTOR.

6.03.A.b On-site sanitary and drinking facilities shall be provided by the CONTRACTOR.

C. Add the following after Paragraph 6.03.B:

"6.03.B.a The use of asbestos or asbestos-based fiber materials is prohibited on this project."

D. Add the following after Paragraph 6.06.B:

All work shall be conducted from within the property boundary, to the maximum extent possible. At no time shall private property be used for access. The routes used by the CONTRACTOR shall be restored to their initial condition at the end of each work day. The access to the work areas shall be via Campus St., or as approved by the ENGINEER.

E. Add the following new Paragraph 6.06.B.2:

"No SUBCONTRACTOR shall be employed unless it holds current State of Florida and/or County contractor's license and (if required) a city occupational license. The CONTRACTOR shall assure that all suppliers are duly licensed in their particular trade of specialty to perform the task for which contracted. Furthermore, the CONTRACTOR shall assure that each SUBCONTRACTOR and/or supplier has adequate liability and worker's compensation insurance, covering the specific type of work to be performed under the Agreement in force throughout the duration of the Agreement. The CONTRACTOR may at its option, provide the necessary insurance for all SUBCONTRACTOR's and/or suppliers at no cost to the OWNER."

F. Add the following to Paragraph 6.11.A.1:

"Damage for which the CONTRACTOR shall be responsible shall include, but not be limited to existing driveways, curbing, sidewalk, cart/bike paths, landscaping, irrigation, signage, mailboxes, decorations, ornamentals and other existing roadside amenities of the community residents or association damaged by the WORK; same shall be replaced by the CONTRACTOR with substantially similar quality, size and type.

G. Add the following to Section 6.11A:

"6.11.A.4 The CONTRACTOR shall not be liable for damages which are pre-existing as of the date of commencement of this Agreement; however, damage to a component which could arguably have been caused in connection with the WORK shall be presumed not to be pre-existing unless the component is specifically listed in an inventory, signed by both the CONTRACTOR and the ENGINEER, to be pre-existing. To this end, the CONTRACTOR and ENGINEER shall meet prior to commencement of the WORK to complete an inventory of pre-existing damages. If a pre-existing condition is worsened during the course of WORK, and same could arguably have been caused in connection with the WORK, then the CONTRACTOR is responsible for the additional damages caused."

H. Add the following after the Paragraph just above quoted:

"6.11.A.5 The CONTRACTOR shall confine his apparatus, materials storage and operations of personnel to the limits indicated by the ENGINEER. All materials used on the project shall be stored in a single place designated by the ENGINEER. The storage area shall be kept clean and the CONTRACTOR shall be liable for damages to the surrounding areas; the OWNER or ENGINEER shall have no responsibility as to the safety, protection or security of same.

6.11.A.6 Contractor hours for construction efforts of the work shall be limited to Monday-Friday 7:00 a.m. to 6:00 p.m. No construction may occur on the weekends or holidays without prior approval by the ENGINEER.

6.11.A.7 Flammable materials and/or any other fire hazardous materials shall be stored, handled and used in an approved manner in accordance with all local codes and ordinances."

I. Add the following to Paragraph 6.11.B:

"The CONTRACTOR shall maintain at all times a dumpster, if necessary, of adequate volume and shall have it emptied periodically before it is filled to capacity. In addition to the periodic dumping, the dumpster shall be covered in an acceptable manner to prevent debris from being blown out over the project site."

J. Delete the last sentence of Paragraph 6.12.A and substitute the following:

"Upon substantial completion of the WORK, these items shall be delivered to the ENGINEER."

K. Add the following to the end of Paragraph 6.13.A:

"Safety and related precautions to be undertaken by the CONTRACTOR shall also include:
6.13.A.4 The CONTRACTOR shall cordon off areas where WORK is being performed, and shall adequately post signs in the construction areas.

6.13.A.5 The CONTRACTOR asserts that it may not use any scaffolding, swing stages, stage booms or other staging, until the ENGINEER agrees to their usage in writing.

6.13.A.6 The CONTRACTOR shall arrange WORK to cause minimum disturbance to pedestrian and vehicular traffic and shall be responsible for providing suitable means of access to all public and private properties during all stages of construction. Other than for an emergency safety condition, the CONTRACTOR must contact the ENGINEER for approval prior to completely blocking off any street or drive area to vehicular traffic during construction.

3.5 ARTICLE 8 – OWNER'S RESPONSIBILITIES

A. Add the following as a new Paragraph 8.12:

"8.12 The OWNER shall provide the services referred to in Paragraphs 3.5.B.1 and 3.5.B.2 as stated in the SUPPLEMENTARY CONDITIONS."

B. 1. The OWNER shall provide guest parking spaces in the parking area for parking of vehicles. The OWNER shall have no responsibility as to safety, protection or security of same.

2. The OWNER shall provide an area for the CONTRACTOR'S dumpster, if applicable.

3.6 ARTICLE 9 - ENGINEER'S STATUS DURING CONSTRUCTION

A. Add the following as a new Paragraph 9.10:

"9.10 No provision in this Agreement shall diminish any responsibility or liability which the ENGINEER may have to the OWNER under that separate employment agreement between the ENGINEER and the OWNER; however, that separate employment agreement shall have no effect on the CONTRACTOR."

B. Add the following as a new Paragraph 9.11:

"9.11 Forty-eight (48) hours notification to the ENGINEER by the CONTRACTOR shall be required for all specified field observations, unless otherwise agreed to by the ENGINEER."

C. Add the following as a new Paragraph 9.12:

"9.12 Upon written confirmation by the CONTRACTOR that all work is completed and ready for final inspection, the ENGINEER shall perform a final inspection and create a punchlist of deficiencies within five (5) days of receipt of written completion from CONTRACTOR. Upon completion of the punchlist items, the CONTRACTOR shall notify the ENGINEER in writing that the deficient items are completed. The ENGINEER shall re-inspect the corrected deficiencies and notify the CONTRACTOR and OWNER within five (5) days of written completion from CONTRACTOR that all work is completed satisfactorily. If the work is not completed satisfactorily, the CONTRACTOR shall be responsible for additional inspection charges incurred by the OWNER as a result of the ENGINEER'S excessive re-inspecting of defective work. Cost of the ENGINEER'S additional efforts shall be hourly at the same rate as per the contract with the OWNER.

3.7 ARTICLE 11 – COST OF WORK; CLAIMS

A. To the extent and if payment is due on the basis of Cost of the WORK, the following shall apply:

In Paragraph 11.01.A.5.F, line five, the following words shall be inserted after the word "negligence". "fault or omission" In Paragraph 11.01.B.4, line one, the following words shall be inserted after the work "negligence" "fault or omission."

3.7A ARTICLE 12 - CHANGE OF CONTRACT PRICE; CHANGE OF CONTRACT TIMES

A. Add the following new Paragraph 12.03.f.:

"12.03.f. Notwithstanding any provision contained in this article 12 or in any other portion of the Contract Documents, the Contract Time shall not be extended by reason of any work performed by the CONTRACTOR or others performing the work. An extension may be approved by the ENGINEER upon request in writing from the CONTRACTOR with good reason.

3.8 ARTICLE 13 - TESTS AND INSPECTIONS; CORRECTION, REMOVAL OR ACCEPTANCE OF DEFECTIVE WORK

A. Add the following after Paragraph 13.03:

"13.03.G All retesting requested by the ENGINEER shall be paid for by the CONTRACTOR.

B. The warranty referred to in Paragraph 13.07 shall be for one (1) year as referenced therein. The obligation of the CONTRACTOR to effect repairs/corrections shall continue until such repairs/corrections are completed as provided for in Article 13, so long notice is mailed or delivered by the ENGINEER within the warranty period (that is, while the warranty is in force.) The CONTRACTOR shall not be relieved of its warranty obligations by the specification of specific products or procedures. Any reference to a guarantee in the General Conditions will also mean and refer to the warranty in section 3.8.B of these Supplementary Conditions. Notwithstanding any provision in Article 13 to the contrary, the following shall also apply: No provision contained in any warranty provided by the material supplier(s) or third parties other than the CONTRACTOR shall in any way compromise or diminish the warranty of the CONTRACTOR under this Agreement. Nor shall the warranty of the CONTRACTOR be diminished or compromised due to the work performed by others to prepare the existing surfaces of specified materials or any other work performed by others prior to the CONTRACTOR performing its WORK under this Agreement."

3.9 ARTICLE 14 - PAYMENTS TO CONTRACTOR AND COMPLETION

A. Add the following Paragraph 14.02.A.4

"14.02.A.4 All applications for payment shall be accompanied with a unit drawing depicting all areas of work, materials and improvements. Additionally, those depicted areas shall be designated as to what category (i.e. unit costs) each item shall be put under in the submitted pay request application."

B. In Paragraph 14.04.A, remove the words "(except for items specifically listed by Contractor as incomplete)".

C. Add the following to the end of Paragraph 14.07.C.1:

"14.07.C.1 Notwithstanding any provisions contained in Paragraph 14.07, the OWNER may refuse to make payment of the full amount recommended by the ENGINEER because claims have been made against the OWNER on account of the CONTRACTOR'S performance or furnishing of the WORK, or liens have been filed in connection with the WORK or there are other items entitling OWNER to a set-off against the amount recommended, but OWNER must give CONTRACTOR immediate written notice (with a copy to the ENGINEER) stating the reasons for such actions."

D. The following new Paragraph 14.10 shall be added:

"14.10 As a condition to the CONTRACTOR receiving a progress payment under Article 14, the CONTRACTOR shall deliver to the ENGINEER, in a form satisfactory to the

ENGINEER, lien waivers from all contractors, subcontractors and materials suppliers. The OWNER shall also be permitted to pay any lienors directly without prior notice to the CONTRACTOR. The CONTRACTOR shall submit to the ENGINEER, upon written request, that progress payment affidavit under F.S. 713.06(3)(c)(1). Furthermore, as a condition to the CONTRACTOR receiving Final Payment under the Agreement, all warranties from suppliers shall be issued and be in full force and effect without qualification."

3.10 ARTICLE 15 - SUSPENSION OF WORK AND TERMINATION

A. Delete "persistent" in Paragraph 15.02.A.1, Line 1.

B. 15.04.A.iii, Replace "30 days" to "60 days".

C. 15.04.B. Replace all "30 days" to "60 days".

3.11 ARTICLE 16 – DISPUTE RESOLUTION

A. Article 16 is deleted in its entirety, and the following shall be substituted in its place:

"No dispute under this agreement shall be resolved by arbitration, but shall be resolved by a court proceeding after the parties have resorted to the remedy under Paragraph 9.08 and 9.09. Furthermore, any references to "arbitration" in this Agreement which have not been specifically deleted, are hereby deemed deleted."

SECTION 5

GENERAL REQUIREMENTS

SECTION 5

GENERAL REQUIREMENTS

1.0 PROJECT LOCATION:

Work shall include the regrading and drainage improvements to the two existing soccer fields located at 319 Campus St., Celebration, FL 34747. as shown in the Construction Plans. The project site is located in the SE quadrant of I-4 and SR 417, at the east end and the south side of Campus St., in Osceola County, Florida.

2.0 SCOPE OF WORK:

A. The work to be performed by the CONTRACTOR includes furnishing all materials, labor, tools, equipment, transportation, supervision, temporary construction of any nature whatsoever necessary to modify, construct, remedy, complete, deliver, and place in operation the subject project as herein described and specified. All work shall be in accordance with the contract documents.

B. The specifications are intended to include everything required and necessary for the proper installation of the work, whether each necessary item is mentioned herein or not, unless otherwise specified, and the CONTRACTOR is expected to provide the same.

C. All work herein specified called for in the specification, or in detailed drawings shall be executed in accordance with all governing ordinances, laws and regulations and shall meet local conditions and any change and/or conditions will be made without additional expense to the OWNER, but such changes shall have the prior written approval of the ENGINEER.

D. The CONTRACTOR shall field verify the location of all existing irrigation components, including but not limited to heads, pipes, risers, electrical wiring and boxes, valves, pumps and/or control equipment within the proposed area of work prior to excavating the field area and the installation of underdrain. The CONTRACTOR shall record locations, horizontally and vertically, for the purposes of as-built documentation. Any components of the irrigation system shall to be removed, modified, and/or replaced as necessary for the installation of the proposed underdrain system. The CONTRACTOR shall take due care cut pipe sections as necessary for installation and not to rip from its existing location by excavating equipment or machinery.

3.0 INTENT OF DOCUMENTS:

A. The documents are intended to outline procedure(s) and furnish guidelines to which the proposed work or part thereof, which shall be, constructed in accordance with the Contract Documents.

4.0 SUBMITTALS:

A. The CONTRACTOR shall submit, with a letter or transmittal to the ENGINEER two (2) sets of checked and approved product specifications. Allow a minimum of two weeks from the date of receipt for review by the ENGINEER. Review of the product specifications will be general and will not relieve the CONTRACTOR from any responsibility.

B. The CONTRACTOR shall submit, with a letter of transmittal to the ENGINEER two (2) sets of product specifications for any substitution of materials labeled as "OR APPROVED EQUAL" on the construction plans. Allow a minimum of two weeks from the date of receipt for review by the ENGINEER. Review of the product specifications will be general and will not relieve the CONTRACTOR from any responsibility.

5.0 QUALITY CONTROL:

A. Field Observations:
Forty-eight (48) hours notification to the ENGINEER by the CONTRACTOR shall be required for all specified field observations, unless otherwise noted.

6.0 MAINTENANCE OF TRAFFIC:

A. The CONTRACTOR shall arrange his work to cause minimum disturbance of normal pedestrian and vehicular traffic and be responsible for providing suitable means of access to all public and private properties during all stages of construction. Other than for an emergency safety condition, the CONTRACTOR must contact the ENGINEER for approval prior to completely blocking off any street or parking to vehicular traffic during construction.

B. Any necessary traffic control in a public ROW shall be conducted only by experienced operators, which shall possess an FDOT Maintenance of Traffic-Intermediate certification, an NSC Flagging Training certification, or approved equal in accordance with project specifications. Proof of certification or other alternate training certifications shall be provided to the ENGINEER for acceptance. Personnel shall be equipped with adequate signage, safety attire, and communication equipment at all times while performing maintenance of traffic operations.

7.0 PLACING EQUIPMENT INTO SERVICE:

A. Electrical equipment shall not be energized, or placed into service, nor shall mechanical equipment be operated by the contractor until approved by the ENGINEER. Such approval shall be granted only after all interested parties have been duly notified in writing have given approval for placing the equipment into service, and all interested parties are present or waived their right to be present. The CONTRACTOR shall notify the ENGINEER a minimum of twenty four (24) hours or as far as in advance as possible of the dates that various items and equipment will be completed and ready for start-up.

8.0 STORAGE AND USE OF PREMISES:

A. The CONTRACTOR shall confine his apparatus, materials storage and operations of personnel to the limits indicated by the ENGINEER. All materials used on the project shall be stored in a single place designated by the ENGINEER. The storage area shall be kept clean and the CONTRACTOR shall be liable for damages to surrounding areas.

B. Flammable materials and/or any other fire hazardous materials shall be stored, handled and use in an approved manner in accordance with all local codes and ordinances.

9.0 ACCESS TO AREAS OF PROPOSED WORK:

A. The work to be performed shall be accessed only through Campus St.

10.0 PROTECTION OF PRIVATE PROPERTY:

A. The CONTRACTOR shall take all precautions to protect the surroundings and common property from experiencing any damage from the work and weather conditions being performed. The CONTRACTOR shall document pre-existing conditions prior to beginning the work to prevent disputes regarding damages during construction. All defective items shall be identified, documented, and provided to the Engineer prior to beginning construction.

B. Upon completion of the proposed work, the CONTRACTOR shall be responsible to repair, replace any item or component of the soccer fields and the surroundings disturbed during the repairs. All disputes and/or claims of damage shall be reviewed in accordance with the general conditions.

C. Should adverse conditions such as severe storms or hurricanes be forecasted to affect the project area, the CONTRACTOR shall be responsible for ensuring the protection of their work up to date.

11.0 PROJECT RECORD DOCUMENTS:

A. The CONTRACTOR shall keep one record copy of all Specifications, Drawings, Agenda, Modifications, Shop Drawings and Samples at the site, in good order and annotated to show all changes made during the construction process.

B. The CONTRACTOR shall submit to the ENGINEER detailed drawings depicting the areas which have been repaired for permanent record and for verification of the submitted pay requests.

12.0 AS-BUILT DRAWINGS:

A. The CONTRACTOR shall provide two (2) sets of as-built drawings and an electronic version to the ENGINEER within 10 days of the substantial completion of work.

B. As-Built drawings shall contain accurate locations, both horizontal and vertical, of all existing, modified, and constructed components of the irrigation system, including but not limited to heads, pipes, risers, electrical wiring and boxes, valves, pumps and/or control equipment within the area of work.

C. As-Built drawings shall also contain the locations, sizes and material of all existing and constructed storm pipes and inlets within the area of work.

D. As-Built drawings shall contain location of other existing improvements such that the components shown per the above can be located via fixed references, such as walkways, utility poles, etc.

SECTION 6

CONTRACTOR'S QUALIFICATION STATEMENT

CONTRACTORS QUALIFICATION STATEMENT

Date: 3/28/2024

Contractor Name: IDA Development LLC
Company Name

361 Cindy Dr. Wellington FL 33414
Address

561-486-0502
Telephone FAX

Harry Knopp Owner
Contact Person Title

Contractor's License Number: CRC1332179 (Attach copy of license)

Name of License Qualifier: Adam Pazzaglia
Qualifier's Ownership of the Company: 51 %

1. Attach a list of the Companies current workload, including projects under contract. Include as a minimum for any similar use project, the following:

   Project Name:
   Project Address:
   Owner Contact and Telephone Number:
   Description of Work:
   Contract Amount and Percent Complete:
   Length of Contract:
   Expected Completion Date:
   Status of the project as related to the project schedule:

2. Attach a list of sports field construction or modifications projects with an Owner Contact and Telephone Number, for all projects with a contract amount of $100,000.00 or more, within the prior 5 year period.

3. Describe the Companies proposed staffing for the Fiscal Year 2024/2025. Identify as a minimum the following:

   Name of Project Superintendent:_____
   Years of full time employment with this company: _____
   Years of full time employment on sports complex related projects: _____

4. Provide photographs and description of completed sports complex projects.

5. Bonding. Indicate the following:
Current bonding limit: $_____
Current dollar amount of bonded projects: $_____
Bonding Company: _____

6. Financial. Provide the following:
Current Financial Statement.
Local Bank and person of contact, for reference.

SECTION 7

STANDARD AGREEMENT

CONSTRUCTION CONTRACT

THIS CONTRACT is entered into this _____ day of _____, 2024, by and between Celebration Residential Owners Association, Inc., (hereinafter referred to as the "OWNER") and _____ (hereinafter referred to as the "CONTRACTOR").

OWNER and **CONTRACTOR,** in consideration of the mutual covenants as hereinafter set forth, and other good and valuable consideration, agree as follows:

ARTICLE I

1. Work. The **CONTRACTOR** shall complete all work as specified or as indicated in the contract documents. "**WORK**" is generally described as follows: Work shall include, as applicable, grubbing, fill, excavation, grading, soil replacement, underdrains, piping, inlets, irrigation repair, sodding, and as-built drawings. in accordance with the specifications and plans prepared by MBV ENGINEERING, Inc.

ARTICLE II

2. Contract Documents. The contract documents, which comprise the entire agreement between the **OWNER** and **CONTRACTOR** are attached to this contract and made a part hereof, and consist of the following:

(a) This contract pages 1 through 4, with General Conditions to the Construction Contract, pages 5 through 10;
(b) MBV ENGINEERING, Inc. Celebration Soccer Fields Drainage Modification Plans, (4 Sheets);
(c) MBV ENGINEERING, Inc. Cessna Tie-Down Improvements (8 Sheets);
(d) Project Manual, All Nine (9) Sections

ARTICLE III

3. Contract Time. The work shall start within 7 days of date of Notice to Proceed. Work described in Section 2 "Instruction to Bidders", Items a. thru j. will be within no more than 120 consecutive days from start of work for the alternate bid scope. An extension of the above timeframes may be approved by the ENGINEER upon request in writing from the CONTRACTOR with good reason.

ARTICLE IV

4. Contract Price. The **OWNER** shall pay the **CONTRACTOR**, in current funds for the performance of the work subject to additions or deductions by change order as provided in the contract documents, the **NOT TO EXCEED** contract sum of _____, which includes the cost of a maintenance bond, unless modified by change order. This is not to exceed contract sum shall not be changed without prior written approval by appropriate change order executed by the **OWNER** and the **CONTRACTOR.**

ARTICLE V

5. Progress Payments. Based upon applications for payments submitted to the **ENGINEER**, the **OWNER** shall make progress payments on account of the contract sum to the **CONTRACTOR** as follows:

a) The **CONTRACTOR** will provide the **ENGINEER** with application for payment on AIA Document G702 detailing completed work as per unit prices on the Proposal Form as of the date of each application for payment. At the time of each application, the **CONTRACTOR** shall submit to the **ENGINEER** all partial waivers/releases of liens for all materials, labor and equipment incorporated into the work as of the date of each application as required by Article II of the General Conditions. The **CONTRACTOR** will be allowed to submit only one application for payment for every thirty day period for the duration of the job. If payment is requested on the basis of material and equipment not incorporated into the work, but delivered and suitable stored at the site or at another location agreed to in writing by the **ENGINEER**, the application for payment shall also be accompanied by bill of sale, invoice or other documentation warranting that the **OWNER** has received the materials and equipment free and clear of all liens and evidence that the material and equipment are covered by appropriate property insurance and other arrangements to protect the **OWNER'S** interest therein, all of which shall be satisfactory to the **ENGINEER.** Only stored material and completed work shall be approved for payment.

b) The **ENGINEER** shall have five (5) working days after receipt of each application for payment to approve the application for payment or indicate in writing reasons for non-approval. The **OWNER** will pay the **CONTRACTOR** all undisputed amount approved on an application for payment within ten (10) days of approval of the application, less a ten percent (10%) retainage.

ARTICLE VI

6. Final Payment.

6.1 Upon completion of all work to be completed under this contract by the **CONTRACTOR** to the satisfaction of the **ENGINEER**, and upon delivery of all warranties for labor and materials incorporated in the work, receipt of all final waivers of lien from all sub-contractors, material suppliers and laborers, completion of all punch list items to the satisfaction of the **ENGINEER**, and receipt of a Final Contractor's Affidavit, the **CONTRACTOR** shall be paid the balance of the contract price and all ten percent (10%) retainages.

ARTICLE VII

7. Miscellaneous.

7.1 This agreement shall not be assigned by either party without the written consent of the other.

7.2 The **OWNER** and **CONTRACTOR** each bind themselves, their partners, successors, assigns and legal representatives to the other party hereto, agree to be bound in respect to all covenants, agreements and obligations contained in the contract documents.

7.3 The parties hereto agree that Time Is Of The Essence for completion of the terms of this contract.

ARTICLE VIII

8. Attorney's Fees. In the event it is necessary for either party to this contract to file any legal proceedings to enforce the terms and conditions of this contract, the prevailing party shall be entitled to recover reasonable attorneys' fees and costs of such actions, including but not limited to attorneys' fees and costs of any Bankruptcy or Appellate proceedings associated with such action.

ARTICLE IX

9. This contract shall not be modified except in writing and executed by both parties hereto.

ARTICLE X

10. The **CONTRACTOR** acknowledges that all work is to be inspected by the **ENGINEER** for proper completion pursuant to the specifications and contract documents.

ARTICLE XI

11. This agreement may be terminated by the **OWNER** with or without cause immediately upon written notice to the **CONTRACTOR**. The **CONTRACTOR** shall be paid all proceeds it is owed for work it satisfactorily performed through the date of termination, if any, unless it is in breach of the agreement.

ARTICLE XII

12. Prior to commencing any work under this contract, the **CONTRACTOR** shall provide the **OWNER** with a payment and performance bond for the full amount of the contract sum on a form acceptable to counsel for the **ENGINEER**. The price of the payment and performance bond is included in the contract sum. The parties understand and agree that this Contract is contingent upon the issuance of the payment and performance bonds required by this paragraph.

WITNESSES:

CELEBRATION RESIDENTIAL OWNERS ASSOCIATION, INC.

_____
Signature of Witness

BY: _____
Signature

_____
Printed Name of Witness

_____
Printed Name and Title

_____
Signature of Witness

_____
Printed Name of Witness

WITNESSES:

CONTRACTOR

_____
Signature of Witness

BY: _____

_____
Printed Name of Witness

_____
Printed Name and Title

_____
Signature of Witness

_____
Company

_____
Printed Name of Witness

GENERAL CONDITIONS TO THE CONSTRUCTION CONTRACT

ARTICLE I

1. Responsibilities of Contractor.

1.1 The CONTRACTOR shall carefully study and compare the contract documents and shall report to the ENGINEER any error, inconsistency, or omission he has discovered. The CONTRACTOR shall perform no portion of the work at any time without contract documents, or, where required, approved shop drawings, product data or samples for such portion of the work.

1.2 The CONTRACTOR shall supervise and direct the work, using his best skill and attention. He shall be solely responsible for all construction means, methods, techniques, sequence and procedures, and for coordinating all portions of the work under the contract.

1.3 The CONTRACTOR is responsible to the OWNER for the acts or omissions of his employees, subcontractors and their agents and employees and other persons performing any of the work under a contract with the CONTRACTOR.

1.4 The CONTRACTOR shall provide and pay for all labor, material, equipment, tools, construction equipment and machinery, transportation, and other facilities and services necessary for proper execution and completion of the work, whether temporary or permanent, and whether or not to be incorporated in the work.

1.5 The CONTRACTOR shall at all times enforce strict discipline in good order among his employees and shall not employ on the work any unfit person or anyone not skilled in the task assigned to him.

1.6 The CONTRACTOR warrants to the OWNER that all material and equipment furnished under this contract shall be new, unless otherwise specified, and that all work will be of good quality, free from faults and defects, and in conformance with the contract documents, and all applicable construction codes in Volusia County, Florida. All work not conforming with these requirements, including substitutions not properly approved and authorized, may be considered defective.

1.7 The CONTRACTOR shall pay all sales, consumer, use and other similar taxes for work or portions thereof provided by the CONTRACTOR, which are legally enacted at the time the bids are received, whether or not yet effective.

1.8 Unless otherwise provided in the contract documents, the CONTRACTOR shall secure and pay for the building permit and other permits, licenses and inspection necessary for proper execution and completion of the work, which are customarily secured after execution of the contract, and which are legally required at the time bids are received.

1.9 The CONTRACTOR shall give all notices and comply with all laws, ordinances, rules, regulations and lawful orders of any public authority bearing on the performance of the work.

1.10 It is the responsibility of the CONTRACTOR to make certain that the contract documents are in accordance with applicable laws, statues, building codes and regulations.

1.11 The CONTRACTOR shall confine operations at the site to the areas permitted by law, ordinances, permits and the contract and shall not unreasonable encumber the site with any materials or equipment.

1.12 The CONTRACTOR shall at all times keep the premises free from accumulation of waste materials or rubbish caused by his operations. At the completion of the work, he shall remove all waste materials and rubbish from and about the project, as well as all his tools, construction equipment, machinery and surplus materials.

ARTICLE II

2. Release of Liens.

2.1 At the time each application for payment is submitted, the CONTRACTOR shall also provide the OWNER with fully executed partial waivers of liens for any and all labor, material and equipment incorporated into the work as of the date of each application for payment. The CONTRACTOR understands and agrees that the OWNER shall not be required to pay any amount to the CONTRACTOR until such time as the OWNER has received such partial waivers of liens covering the amount requested in the application for payment.

2.2 Upon completion of the work and at the time of application for final payment the CONTRACTOR will provide the OWNER with final waivers or releases of liens for any and all labor, material and equipment incorporated into the work and a Final Contractor's Affidavit pursuant to Florida Statues Chapter 713.

ARTICLE III

3. Indemnification. To the fullest extent permitted by law, and in exchange for separate consideration of Ten Dollars in hand paid by the OWNER to the CONTRACTOR, and other good and valuable consideration, the CONTRACTOR shall indemnify and hold harmless the OWNER and its agents, employees and assigns from and against all claims, damages, losses and expenses including but not limited to attorneys' fees arising out of or resulting from (1) the performance of the work provided, that any such claim, damage or loss or expense is attributable to bodily injury, sickness, disease or death, or to injury to or destruction of tangible property, including the work, and the loss of the use resulting therefore; and (2) is caused in whole or in part by negligent act or omission of the CONTRACTOR, any subcontractor, anyone directly or indirectly employed by any of them, or anyone for whom acts any of them may be liable.

ARTICLE IV

4.1 The CONTRACTOR warrants that title to all material and equipment incorporated in the work shall pass to the OWNER upon direct payment by OWNER to the material supplier. The CONTRACTOR further warrants that title to all work covered by an application will pass to the OWNER either by incorporation in the construction or upon receipt of payment by the CONTRACTOR, whichever occurs first, free and clear of all liens, claims, security interests or encumbrances.

4.2 Safety. The CONTRACTOR shall be responsible for initiating, maintaining and supervising all safety precautions and programs connected with the work.

ARTICLE V

5. Insurance. During the progress of this work, the CONTRACTOR shall maintain such insurance as requested by the OWNER, including but mot limited to (1) Workers Compensation and Employers Liability per Florida Statute §440.02; (2) comprehensive general liability, including premises operations, bodily injury protection, independent contractors protective, products and completed operations and broad form property damage in the mount of $1,000,000.00 per occurrence. The OWNER shall be an additional named insured on all liability insurance required by the CONTRACTOR. THE CONTRACTOR SHALL PROVIDE THE OWNER WITH AN ENDORSEMENT AND CERTIFICATE OF INSURANCE OF ALL THE ABOVE DESCRIBED INSURANCE PRIOR TO BEGINNING ANY WORK UNDER THIS CONTRACT.

ARTICLE VI

6. Changes. A change order is a written order to the CONTRACTOR signed by the ENGINEER issued after execution of the contract, authorizing a change in the work or any adjustment in the contract price or the contract time. The contract price and the contract time may be changed only by change order. Change orders shall reflect labor, material, general conditions, performance bond, and shall reflect as to total number of construction days as approved by the ENGINEER.

ARTICLE VII

7. Correction of Work. The CONTRACTOR shall promptly correct all work rejected by the ENGINEER as determined by the ENGINEER as defective or as failing to conform with the applicable building codes or the contract documents whether observed before or after completion, and whether or not fabricated, installed or completed by the CONTRACTOR. The CONTRACTOR shall bear all costs of correcting such rejected work, including compensation for any engineering or Agent/Representative fees incurred as a result of such defect. In the event the ENGINEER makes a determination that the contractor's work is defective, the CONTRACTOR shall have fifteen (15) days from the date of written notification by the ENGINEER of any defects to cure all defects.

ARTICLE VIII

8. Inspection. The ENGINEER shall have reasonable access to the work at all times. Work will be approved as it progresses, but failure to detect or reject defective work shall not prevent its rejection at any time before the completion of the contract. The CONTRACTOR shall be responsible for additional inspection charges incurred by the OWNER as a result of the ENGINEER'S excessive re-inspecting of defective work or the CONTRACTOR'S continued poor and untimely performance in the completion of the work.

ARTICLE IX

9. Suspension of the Work. The OWNER may suspend the work at any time wholly or in part due to the CONTRACTORS failure to perform within the provisions of the contract, as determined by the ENGINEER. The CONTRACTOR shall have fifteen (15) days from receipt of written notice of such failure to perform within which to cure same.

ARTICLE X

10. Warranty.

10.1 The CONTRACTOR warrants all work, material and equipment provided under this contract to be free from defects or inferior workmanship for a period of one (1) year from date of completion of all work. The CONTRACTOR shall provide the OWNER with an unconditional letter of warranty covering all defects in workmanship and materials for one (1) year, along with all manufacturers' warranties for all material incorporated into the work. The CONTRACTOR shall provide a one (1) year maintenance bond in the amount of 25% of the total cost of the contracted work. An additional amount may be required by the OWNER as a result of the ENGINEER'S recommendation for finished work which is suspect for reasons to be provided to the CONTRACTOR on the final punchlist.

10.2 Determination of warranty issues and validity of warranty will be mutually agreed upon by representatives of the CONTRACTOR and OWNER. If consensus cannot be reached, an independent third party will be hired and all costs of such hire will be split evenly between CONTRACTOR and OWNER. The third party hire will be agreed to by both CONTRACTOR and OWNER for any warranty issues.

10.3 The term of the warranty will be for a period of one year beginning the date of the ENGINEER'S Certificate of Substantial Completion Letter and will expire 365 days from that date.

ARTICLE XI

11. Repair to Access Areas and Areas Damaged During Construction. The CONTRACTOR shall be responsible for complete restoration of all areas disturbed due to construction activities. The area shall be restored with equal vegetation, sod, and irrigation as determined by the ENGINEER. The site shall be restored to equal or better condition.

ARTICLE XII

12. Special Conditions.

a. Should adverse conditions such as severe storms or hurricanes be forecasted, the CONTRACTOR shall take all necessary precautions to the extent possible, to protect all portions of completed work from damages.

b. CONTRACTOR shall supply all necessary electric to complete this project, including portable generators as required.

WITNESSES:

CELEBRATION RESIDENTIAL OWNERS ASSOCIATION, INC.

_____
Signature of Witness

BY: _____
Signature

_____
Printed Name of Witness

_____
Printed Name and Title

_____
Signature of Witness

_____
Printed Name of Witness

WITNESSES:

CONTRACTOR

_____
Signature of Witness

BY: _____

_____
Printed Name of Witness

_____
Printed Name and Title

_____
Signature of Witness

_____
Company

_____
Printed Name of Witness

SECTION 8

BID SHEET

(TO BE PROVIDED BY CONTRACTOR)

IDA

DEVELOPMENT

Celebration Soccer Fields

Grading and Drainage Modifications

Celebration Residential Owners Association

851 Celebration Ave
Celebration, FL 34747

Attn. : Ms. Lauren Gunnyon, Manager

Harry Knopp, Founder

(561) 486-8406

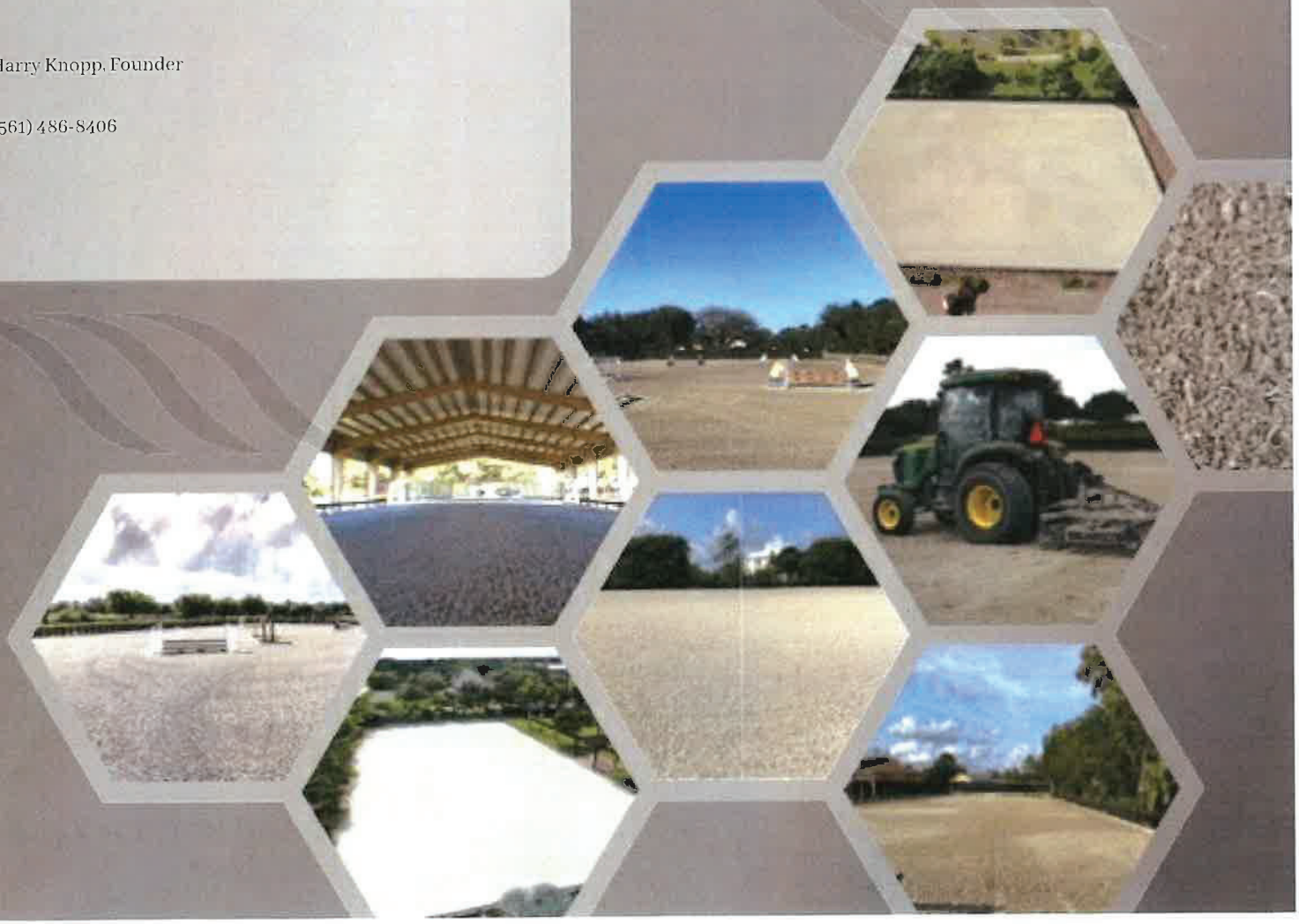

IDA

DEVELOPMENT

Dear Ms. Gunnyon

IDA Development is one of the industry's premier builders specializing in luxury homes, equestrian estates, custom riding arenas and fields. It's our surface materials and building background that sets us apart from other licensed contractors.

With over 30 years' experience in the industry, IDA Development truly lives up to the IDA reputation of high-quality work with excellent customer service.

We have visited the site directly and have carefully reviewed the requirements of this Project Manual for the Celebration Soccer Field Grading and Drainage Modifications and we are pleased to submit this proposal bid sheet.

We look forward to safely and successfully completing the requirements of this project.

All the best.

Harry Knopp, Founder

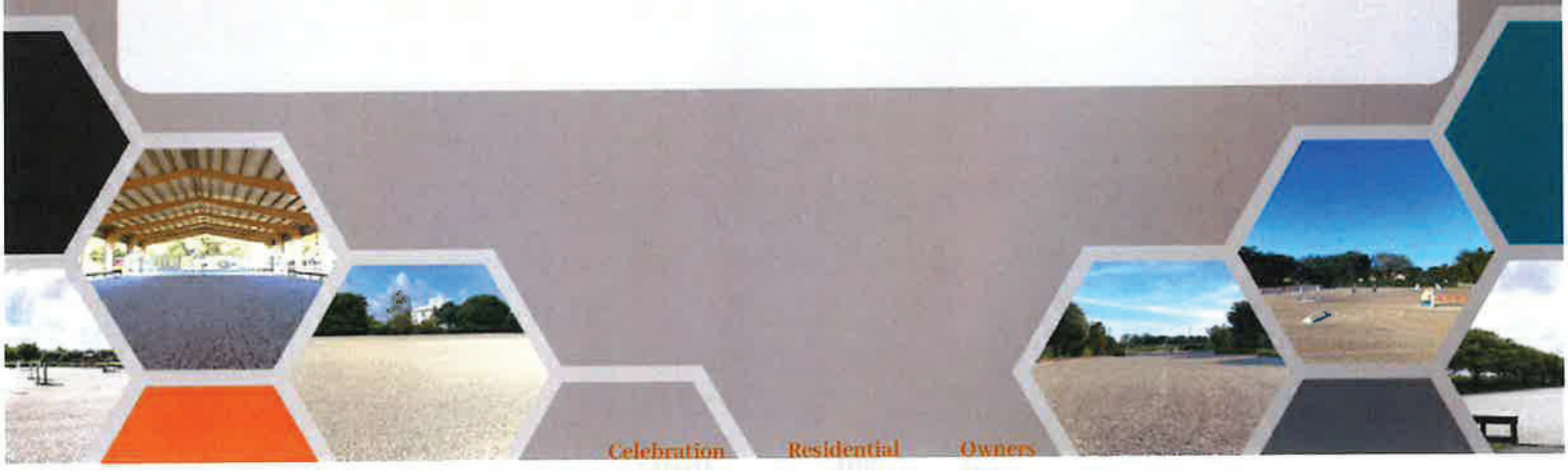

IDA
DEVELOPMENT

Project Summary

This proposal provides an outline and estimate of costs for maintenance on client fields located at 851 Celebration Ave, Celebration, Florida.

IDA Development Supplies:

Scope of Work:

- Material and Labor: Grubbing, Excavation, Drainage Piping, Under-drains, Drainage Inlets. Irrigation Repair
- Material and Labor: Imported Fill, Grading , Soil Replacement, Sodding
- As-Built drawings
- All cleanup of debris and trash removal from the site upon completion of the project
- Dumpster for Trash
- Project/Safety Manager
- Excluded and Pending further input: Removal of Excess Material (on site or off site) pending Client direction.

The Client Provides:

- Engineering Review and Approval as per Project Manual

Contract Time:

- IDA Development confirms that the work shall start within 7 days of date of Notice to Proceed.
- The work will be completed within no more than 120 consecutive days from start of work.

Proposal Excludes

- Client is asked to clarify the plan for Removal of excess material (estimated to be 75 loads) to a location on site or off site.
- IDA Development will provide supplemental pricing upon receipt of clarification.

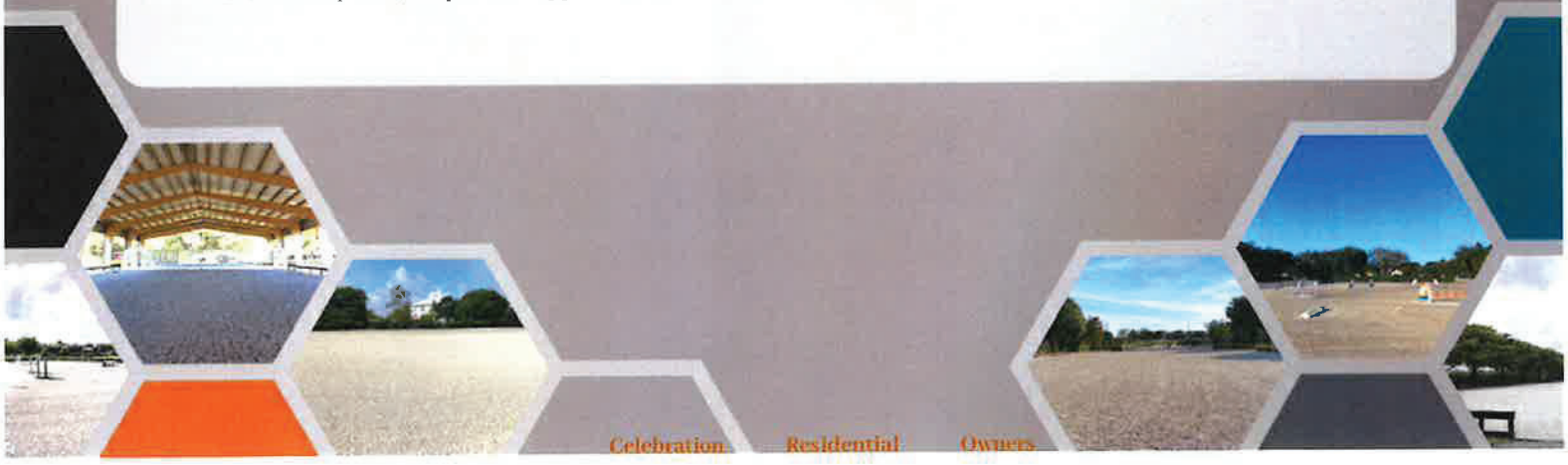

IDA

DEVELOPMENT

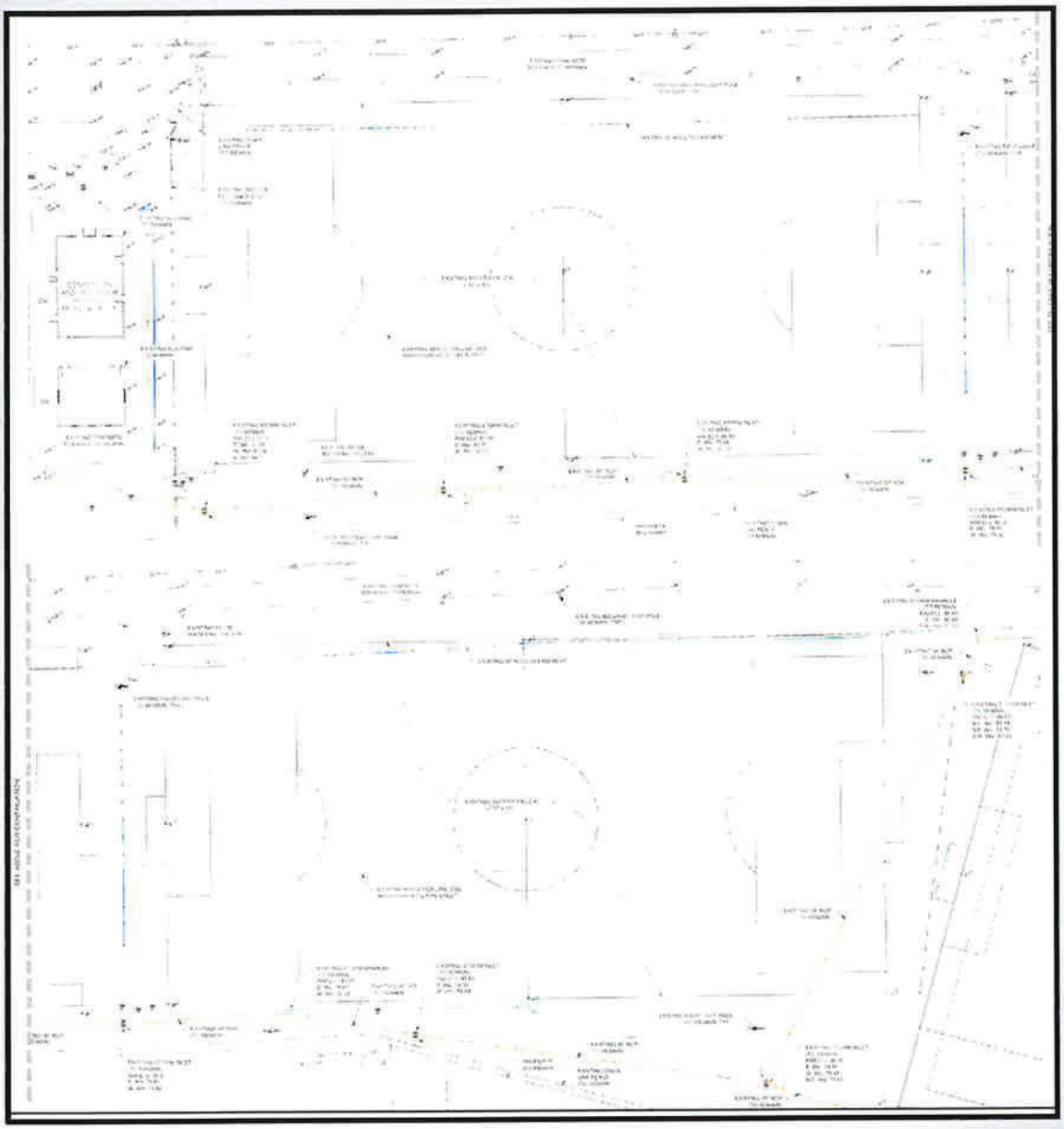

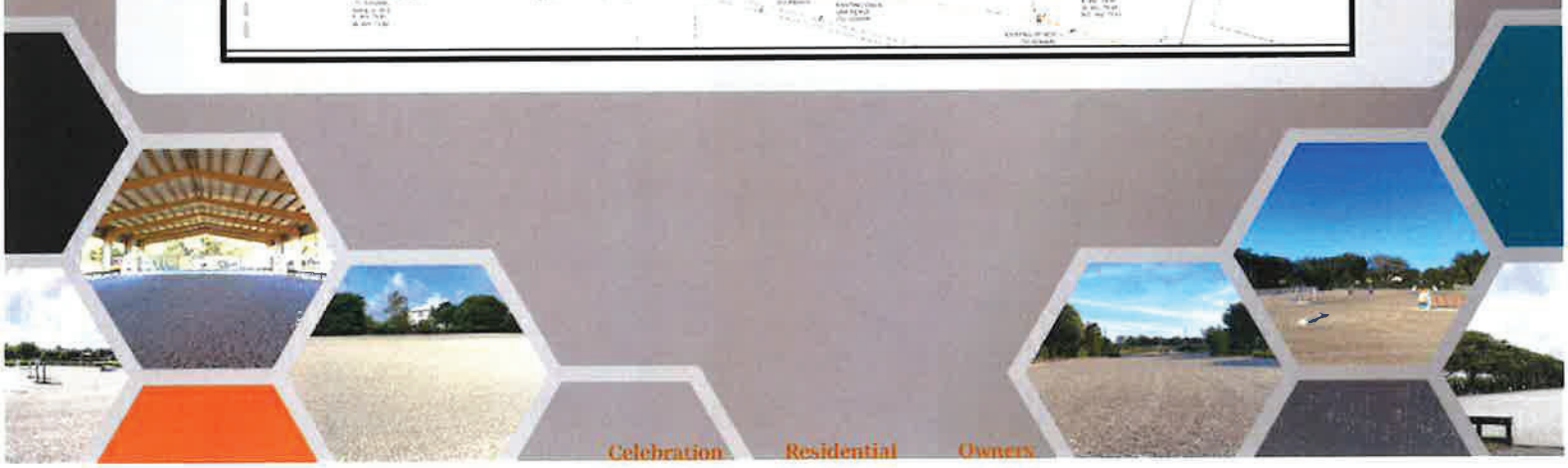

Celebration Residential Owners

IDA

DEVELOPMENT

DRAIN LAYOUT - FIELD #1

AdvanEDGE UNDERDRAIN LAYOUT - FIELD #2

IDA

DEVELOPMENT

Subgrade

Laser Grade

Celebration Residential Owners

IDA

DEVELOPMENT

Install Sand & Laser Grade

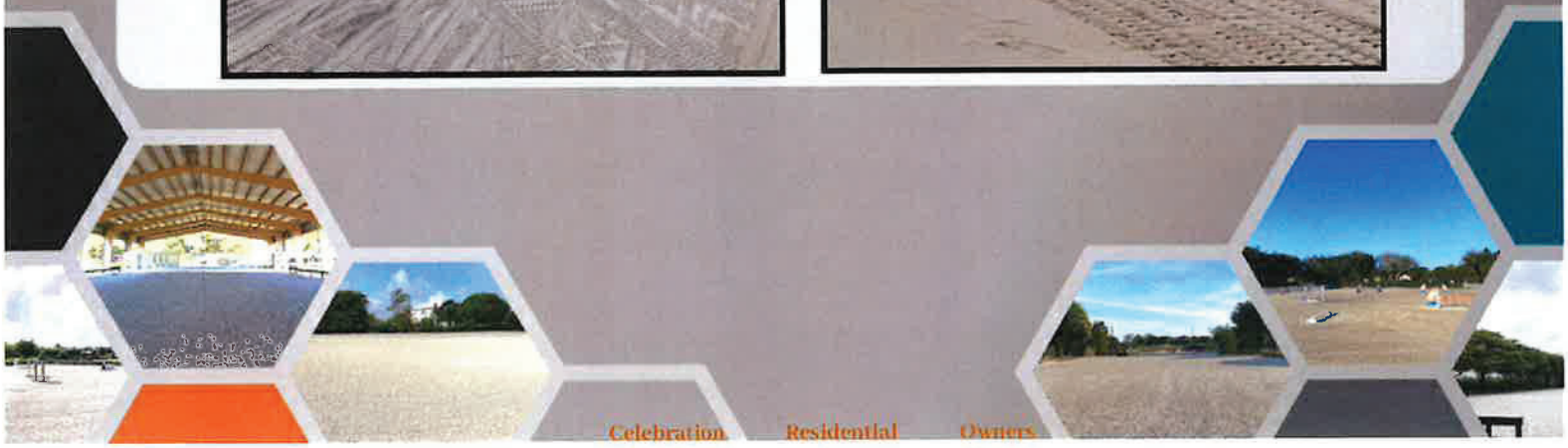

Celebration Residential Owners

IDA
DEVELOPMENT

Fee Summary

Scope of Work

- Grubbing
- Excavation: Remove 12" of dirt (client provides means of disposal for removed material. est 75 loads)
- Install fabric paper
- Drainage Piping
- Under-drains
- Connect drainage to outflow piping system
- Drainage Inlets
- Irrigation Repair
- As-Built drawings
- Imported Fill
- Install required sand, mixing 25% of exiting material with 75% new material
- Laser Grade mixed sand
- Install Celebration Sod

Description	Subtotal
Celebration Soccer Field Grading and Drainage Modifications	$673,726
Total	$673,726

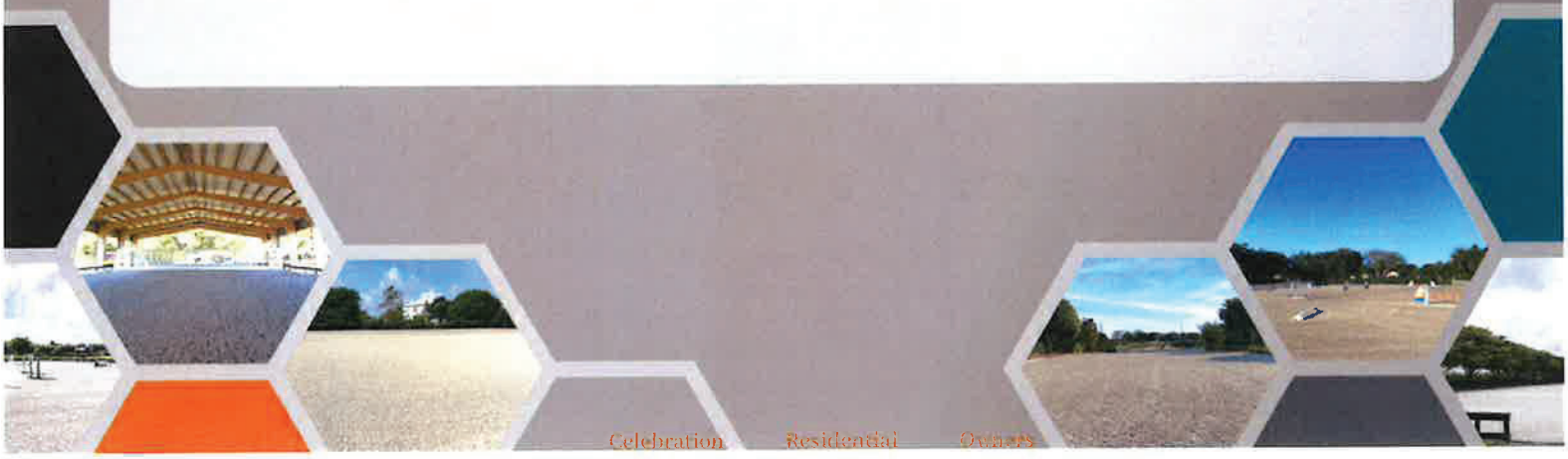

IDA
DEVELOPMENT

Signature Page

IDA Development proposes to complete the work outlined in this proposal for an all-inclusive fee of $673,726.00 plus taxes if applicable, not including any unforeseen or unexpected conditions. This includes project management, equipment, materials, labor, scheduling, supervision, and quality assurance.

Additional charges will be included, as per contract terms and conditions, if changes are made to the project scope once this document has been signed and/or differences between the allowance outlined above and the actual cost of these items varies.

The next step is to agree to this proposal (in addition to any changes that have been noted in the presentation of this document), and to sign the contractual agreement which references the document above.

** Estimate is only valid for 30 days **

Lauren Gunnyon

Celebration Residential Owners Association signature _____

Date:

Harry Knopp, Founder

IDA Development signature _____

Date:

Ron DeSantis, Governor

Melanie S. Griffin, Secretary

STATE OF FLORIDA
DEPARTMENT OF BUSINESS AND PROFESSIONAL REGULATION

CONSTRUCTION INDUSTRY LICENSING BOARD

THE RESIDENTIAL CONTRACTOR HEREIN IS CERTIFIED UNDER THE
PROVISIONS OF CHAPTER 489, FLORIDA STATUTES

PAZZAGLIA, ADAM D

IDA DEVELOPMENT, LLC
361 CINDY DRIVE
WELLINGTON FL 33414

LICENSE NUMBER: CRC1332179

EXPIRATION DATE: AUGUST 31, 2024

Always verify licenses online at MyFloridaLicense.com

Do not alter this document in any form.

This is your license. It is unlawful for anyone other than the licensee to use this document.

SECTION 9

APPLICATION FOR PAYMENT

APPLICATION AND CERTIFICATE FOR PAYMENT AIA DOCUMENT 0702

TO OWNER: **Celebration ROA**

PROJECT: **Celebration Soccer Fields**

APPLICATION NO.:
PERIOD TO:
PROJECT NOS.:

Distribution to:
☐ OWNER
☐ ENGINEER
☐ CONTRACTOR

FROM CONTRACTOR:

VIA ENGINEER: **MBV Engineering, Inc.**

CONTRACT DATE:

CONTRACT FOR:

CONTRACTOR'S APPLICATION FOR PAYMENT

Application is made for payment, as shown below, in connection with the Contract. Continuation Sheet, AIA Document G703, is attached.

1. ORIGINAL CONTRACT SUM..... .$_____

2. Net change by Change Orders ..... .$_____

3. CONTRACT SUM TO DATE (Line 1 ± 2)..... .$_____

4. TOTAL COMPLETED & STORED TO DATE .....
(Column G on G703)

5. RETAINAGE:
a. ____% of Completed Work $_____
(Columns D + E on G703)
b. ____% of Stored Material $_____
(Column F on G703)
Total Retainage (Line 5a + 5b or
Total in Column I of G703)..... $_____

6. TOTAL EARNED LESS RETAINAGE..... $_____
(Line 4 less Line 5 Total)

7. LESS PREVIOUS CERTIFICATES FOR PAYMENT
(Line 6 from prior Certificate) ..... $_____

8. CURRENT PAYMENT DUE ..... $_____

9. BALANCE TO FINISH, INCLUDING RETAINAGE
(Line 3 less Line 6) $_____

CHANGE ORDER SUMMARY	ADDITIONS	DEDUCTIONS
Total changes approved in previous Months by owner		
Total approved this timeframe		
TOTALS		
NET CHANGES by Change Order		

The undersigned Contractor certifies that to the best of the Contractor's knowledge, information and belief the Work covered by this Application for Payment has been completed in accordance with the Contract Documents, that all amounts have been paid by the Contractor for Work for which previous Certificates for Payment were issued and payments received from the Owner, and that current payment shown herein is now due.

CONTRACTOR:

By: _____ Date: _____

State of:
County of:
Subscribed and sworn *to* before
me this day of

Notary Public:
My Commission expires:

ENGINEER'S CERTIFICATE FOR PAYMENT

In accordance with the Contract Documents, based on on-site observations and the data comprising this application, the Engineer certifies to the Owner that to the best of the Engineer's knowledge, information and belief the Work has progressed as indicated, the quality of the Work is in accordance with the Contract Documents, and the Contractor is entitled to payment of the AMOUNT CERTIFIED.

AMOUNT CERTIFIED ..... $_____

(Attach explanation if amount certified differs from the amount applied for. Initial all figures on this Application and on the Continuation Sheet that are changed to conform to the amount certified.)

ENGINEER:

By: _____ Date: _____

This Certificate is not negotiable. The AMOUNT CERTIFIED is payable only to the Contractor named herein. Issuance, payment and acceptance of payment are without prejudice to any tights of the Owner or Contractor under this Contract.

MEDLEY
SPORTS CONSTRUCTION

QUOTE

Quote # 32724
PO BOX 777
Sorrento, Florida 32776

Date: 3-27-24

TO:
CELEBRATION RESIDENTIAL OWNERS' ASSOCIATION
851 Celebration Ave.
Celebration, Fl 34747

FOR: Celebration Soccer Field Renovations BID 23-1068

Mobilization P&P Bond Building Permit included only - engineering, fdot, water management permits not included if need be Soil testing included Erosion protection around Inlets Strip off grass and haul away Strip off approx. 13" soil on entire field (keep 25%) haul away rest Import 75% sand to meet spec Lasrgrade Subbase Supply and install 8" and 12" perimeter pipes per plan. -yard drains included -4 tie ins to existing basins included Supply and install 12" ADS Advantage field flat pipes per plan. -4" insertatee and end outlets included Spread and Laser grade 75/25 sand mix over pipes and field area Supply and install new celebration Bermuda sod in big rolls 1 Asbuilt plan per field included Clean Up	$543,965.00
DEDUCT- 12" J drain flat drain in place of 12" ADS Advantedge flat pipe	-$22,500.00
Supply and install new irrigation lateral lines and heads on field space only 360x165 (2 fields) ***Mainline and valves amd wires are not included See attached hunter design for heads and spacing with lateral lines	$44,750.00

*****NOTES as applicable*****

Irrigation Repairs or Replacement not included******

***Tree work of any kind is not included
***Unforeseen underground conditions may arise and could result in extra work
***Dewatering of any kind is not included whatsoever

*** Fence work not included
***design and permits are not included. Engineering reports of any kind are not included
***Damages from accessing the work area to and from with heavy equipment may occur. Medley Sports Construction shall not be responsible for damages to any existing or new sidewalks, asphalt roadways, driveways or any other areas crossing or nearby the workspace
***Surveying, testing, inspections, any kind of fees, permit costs, any kind of engineering reports, as-builts are not included and shall be by others. Unless it is specifically listed on this quote.
***Access must be always provided by the owner or general contractor during working hours. Wait time charges will apply per hour.
**35% payment upon mobilization of equipment, 50% upon sandmix being spread, final balance upon completion
*** temporary/power, water, and other facilities to be supplied by others at all times for use during working hours
**The existing subgrade and conditions must be verified before mobilization. Survey stakes of marked elevations within .1 at subgrade and a final location and layout is to be provided by others.
***Concrete Pump if listed on this quote must be able to reach within 300' or extra hose charges will apply

MEDLEY SPORTS CONSTRUCTION		as of Oct 2022			
Client Name	**SCOPE**	**TELEPHONE #**	**ADDRESS**	**CONTRACT AMOUNT**	**DATE COMPLETED**
University of West Florida	Synthetic turf football field	Jeff Etheridge (850) 474-3499	11000 University Pkwy, Pensacola, FL 32514	720,000.00	Feb. 1 2016
XL Soccer World	5000 SF custom concrete patio	Ciaran Mcardle 508-579-3586	825 Courtland St, Orlando, FL 32804	75,000.00	Mar-16
Indian Rocks Christian School	400M running track renovation	Tim Ferguson (727) 595-3421	12685 Ulmerton Road Largo, FL 33774	480,000.00	Jan. 2016
University of West Florida	Soccer field Upgrade	Jeff Etheridge (850) 474-3499	11000 University Pkwy, Pensacola, FL 32514	12,500.00	March-16
University of West Florida	Synthetic turf Gymnasium (10000SF)	Jeff Etheridge (850) 474-3499	11000 University Pkwy, Pensacola, FL 32514	49,500.00	May-16
Lake County parks and recreation	New 2 bay,3 bay and bench swings throughout county parks	CHRIS MACDONALD 352-253-4950	12929 County Landfill Road, Tavares, FL 32778	45,000.00	July-16
Lake County parks and recreation	Replace large slides at North lake community park	CHRIS MACDONALD 352-253-4950	12929 County Landfill Road, Tavares, FL 32778	45,000.00	Oct. 2016
Jacksonville Beach Skate Park	2 Shades, 2 shelter, retaining wall and synthetic turf areas	David Flores 813-323-7895	2508 S Beach Pkwy, Jacksonville Beach, FL 32250	185,000.00	Mar-17

Doral Legacy Park	New baseball field & 2 volleyball courts	Blake Shatto (727) 585-2084	11400 NW 82nd St, Doral, FL 33178	135,000.00	Mar-17
Bishop Moore HS	Baseball infield renovation- Grass to turf	Douglas Armstrong (407) 293-7561	3901 Edgewater Dr, Orlando, FL 32804	245,000.00	Feb-17
Windermere Prep	15x20 Shade and paver area	Danny Haney 954-383-3442	6189 Winter Garden Vineland Rd, Windermere, FL 34786	25,000.00	Nov. 2016
City of Clermont	Palatlakaha Park Renovation	Joe McMahon 352-394-4081	400 12th St., Clermont, FL 34711	438,960.00	May-17
City of New Symrna Beach	Windscreens on entire park, 1 Batting Cage, Sports Netting and sports equipment	Kevin Day 860.803.3579	1800 Turnbull Bay Rd, New Smyrna Beach, FL 32168	85,000.00	May-17
Town of Astatula	Playground Renovations	Mitch Mack 352-742-1100	Town of Astatula 25009 County Road 561, Astatula, FL 34705	30,000.00	May-17
Ave Maria university	NCAA football/soccer field	Chris Franks 216-570-5656	5050 Ave Maria Blvd, Ave Maria, FL 34142	250,000.00	Sep-17
Orangewood Christian	Synthetic turf basebll infield	Jim Johnston 407.539.1500	1300 W. Maitland Blvd Maitland, FL 32751	250,000.00	Nov-18
Winderemere Prep	Resurface Tennis Courts	Danny Haney 954-383-3442	6189 Winter Garden Vineland Rd, Windermere, FL 34786	50,000.00	Jan-18
Bishop Moore HS	Baseball field Drianage	Douglas Armstrong (407) 293-7561	3901 Edgewater Dr, Orlando, FL 32804	50,000.00	Feb-18

City of Clermont	Park Renovations	Joe McMahon 352-394-4081	400 12th St., Clermont, FL 34711	345,000.00	Mar-18
Town of Astatula	20x20 Shade structure	Mitch Mack 352-742-1100	Town of Astatula 25009 County Road 561, Astatula, FL 34705	15,000.00	April 1 2018
Bishop Moore HS	Lacrosse Field Project	Douglas Armstrong (407) 293-7561	3901 Edgewater Dr, Orlando, FL 32804	825,000.00	Jun-19
Macdill AFB	2 Shade Structures	Mackey Williams (813) 251-8051	504 S. Moody Avenue Tampa, FL 33609	110,000.00	May-18
Round Lake Charter	Soccer field upgrade and Cross country course	Todd Roman 352-385-4399	31333 Round Lake Rd, Mt Dora, FL 32757	40,000.00	Aug-18
Round Lake Charter	Resurfaced Basketball Courts	Todd Roman 352-385-4399	31333 Round Lake Rd, Mt Dora, FL 32757	5,000.00	Aug-18
Real Life Church of Clermont	Playground Renovations	Chris Hammett 352-394-3553	1501 Steve's Road Clermont, FL 32801	15,000.00	Sep-18
Real Life Church of Clermont	Parking lot grading and upgrades	Chris Hammett 352-394-3553	1501 Steve's Road Clermont, FL 32801	65,000.00	Sep-18
North Broward Prep	Resurfaced 5 Tennis Courts	Mike Ostrowski (561) 908-1590	7600 Lyons Rd, Coconut Creek, FL 33073	25,000.00	Aug-18
Windermere LL	Baseball and Softball upgrades	Irene Pini 407-399-5214	Windermere Little League, P.O. Box 552, Windermere, FL 34786	25,000.00	Nov-18

City of Holly Hill	National Traning Campaign-Outdoor Fitness Court	Steve Juengst 386-248-9463	453 LPGA Blvd Holly Hill, FL 32117	60,000.00	Dec-18
City of Hallandale beach	Synthetic turf Soccer field-SAFESHELL infill system	Matt Carney-561-504-9893	Kaufman Lynn Construction	785,000.00	Jul-19
Orlando City Soccer	Baseball to soccer turf field conversion	Daniel Quesada407-952-0797	Orlando City Soccer	625,000.00	Sep-19
Serenoa Community Center	Shades, pavillions, pickleball and bocce courts	Steve ivins 407-353-2372	Jordan Brothers Construction	175,000.00	Dec-19
XL Soccer World	Complete site development of fullsize soccer field	Ciaran-508-579-3586	XL Soccer world	450,000.00	Jun-20
XL Soccer world	30x60 patio shade	Ciaran-508-579-3586	XL soccer world	45,000.00	Jun-20
Osceola County Parks	2 complete park renovations	407-908-1860	Rob- Osceola County	325,000.00	Jul-20

Fabel Residence	Basketball/pickelball and bocce court for residence	Tony F. 321-276-5174	526 cocoa lane	55,000.00	Nov-20
Trinity Prep School	3 Cantilever Pool Shades including bleachers	Jeff- jambrose@trinityprep.org	5700 Trinity prep lane, Orlando FL	127,500.00	21-Jan
Windsor amenity Center	Multisports court,volleyball court,bocce court, 9 hole putt putt, shades installation	JK2 Construction	1931 Summer Drive, Davenport, FL 33897	149,500.00	21-Sep
City of Greenacres	24 station Bankshot basketball court	City of Greenacres	Freedom Park-2400 Pinehurst dr.	62,500.00	May-21
Central Fl. Dream Plex	Play Space Area- Shade, synthetic turf pip rubber surface	Dreamplex-Rachel Managan	Adanson Road	59,000.00	Feb-22
Orlando City Soccer	Covered Turf Area	Orlando City- Daniel Q.	Orlando City Soccer	55,000.00	Mar-22
East park	Convert 2 basketball to 4 pickleball courts	Micheal W.	City of orlando	27,000.00	1-Jun
lake felter park	2 Tennis courts reconstruction	Joe McMahon 352-394-4081	City of Clermont	75,000.00	Jul-22
XL Soccer World	Complete site development for 2 full size soccer field	Ciaran	XL Soccer world	1,200,000.00	23-Nov
Astor lions park	Remove and replace playground and shade	Chris M	Lake county parks and trails	90,000.00	23-Nov

Form **W-9**
(Rev. October 2018)
Department of the Treasury
Internal Revenue Service

Request for Taxpayer Identification Number and Certification

▶ Go to *www.irs.gov/FormW9* for instructions and the latest information.

Give Form to the requester. Do not send to the IRS.

Print or type. See Specific Instructions on page 3.

1 Name (as shown on your income tax return). Name is required on this line; do not leave this line blank.
William Medley Construction, INC.

2 Business name/disregarded entity name, if different from above
Medley Sports Construction

3 Check appropriate box for federal tax classification of the person whose name is entered on line 1. Check only one of the following seven boxes.

☐ Individual/sole proprietor or single-member LLC ☐ C Corporation ☒ S Corporation ☐ Partnership ☐ Trust/estate

☐ Limited liability company. Enter the tax classification (C=C corporation, S=S corporation, P=Partnership) ▶ _____

Note: Check the appropriate box in the line above for the tax classification of the single-member owner. Do not check LLC if the LLC is classified as a single-member LLC that is disregarded from the owner unless the owner of the LLC is another LLC that is not disregarded from the owner for U.S. federal tax purposes. Otherwise, a single-member LLC that is disregarded from the owner should check the appropriate box for the tax classification of its owner.

☐ Other (see instructions) ▶

4 Exemptions (codes apply only to certain entities, not individuals; see instructions on page 3):

Exempt payee code (if any) _____

Exemption from FATCA reporting code (if any) _____

(Applies to accounts maintained outside the U.S.)

5 Address (number, street, and apt. or suite no.) See instructions. PO BOX 777

Requester's name and address (optional)

6 City, state, and ZIP code Sorrento, FL 32776

7 List account number(s) here (optional)

Part I Taxpayer Identification Number (TIN)

Enter your TIN in the appropriate box. The TIN provided must match the name given on line 1 to avoid backup withholding. For individuals, this is generally your social security number (SSN). However, for a resident alien, sole proprietor, or disregarded entity, see the instructions for Part I, later. For other entities, it is your employer identification number (EIN). If you do not have a number, see *How to get a TIN*, later.

Note: If the account is in more than one name, see the instructions for line 1. Also see *What Name and Number To Give the Requester* for guidelines on whose number to enter.

Social security number
[ ][ ][ ] - [ ][ ] - [ ][ ][ ][ ]

or

Employer identification number
26- - 1612878

Part II Certification

Under penalties of perjury, I certify that:

1. The number shown on this form is my correct taxpayer identification number (or I am waiting for a number to be issued to me); and
2. I am not subject to backup withholding because: (a) I am exempt from backup withholding, or (b) I have not been notified by the Internal Revenue Service (IRS) that I am subject to backup withholding as a result of a failure to report all interest or dividends, or (c) the IRS has notified me that I am no longer subject to backup withholding; and
3. I am a U.S. citizen or other U.S. person (defined below); and
4. The FATCA code(s) entered on this form (if any) indicating that I am exempt from FATCA reporting is correct.

Certification instructions. You must cross out item 2 above if you have been notified by the IRS that you are currently subject to backup withholding because you have failed to report all interest and dividends on your tax return. For real estate transactions, item 2 does not apply. For mortgage interest paid, acquisition or abandonment of secured property, cancellation of debt, contributions to an individual retirement arrangement (IRA), and generally, payments other than interest and dividends, you are not required to sign the certification, but you must provide your correct TIN. See the instructions for Part II, later.

Sign Here Signature of U.S. person ▶ Erik Medley Date ▶ 2-22-24

General Instructions

Section references are to the Internal Revenue Code unless otherwise noted.

Future developments. For the latest information about developments related to Form W-9 and its instructions, such as legislation enacted after they were published, go to *www.irs.gov/FormW9.*

Purpose of Form

An individual or entity (Form W-9 requester) who is required to file an information return with the IRS must obtain your correct taxpayer identification number (TIN) which may be your social security number (SSN), individual taxpayer identification number (ITIN), adoption taxpayer identification number (ATIN), or employer identification number (EIN), to report on an information return the amount paid to you, or other amount reportable on an information return. Examples of information returns include, but are not limited to, the following.

- Form 1099-INT (interest earned or paid)
- Form 1099-DIV (dividends, including those from stocks or mutual funds)
- Form 1099-MISC (various types of income, prizes, awards, or gross proceeds)
- Form 1099-B (stock or mutual fund sales and certain other transactions by brokers)
- Form 1099-S (proceeds from real estate transactions)
- Form 1099-K (merchant card and third party network transactions)
- Form 1098 (home mortgage interest), 1098-E (student loan interest), 1098-T (tuition)
- Form 1099-C (canceled debt)
- Form 1099-A (acquisition or abandonment of secured property)

Use Form W-9 only if you are a U.S. person (including a resident alien), to provide your correct TIN.

If you do not return Form W-9 to the requester with a TIN, you might be subject to backup withholding. See What is backup withholding, *later.*

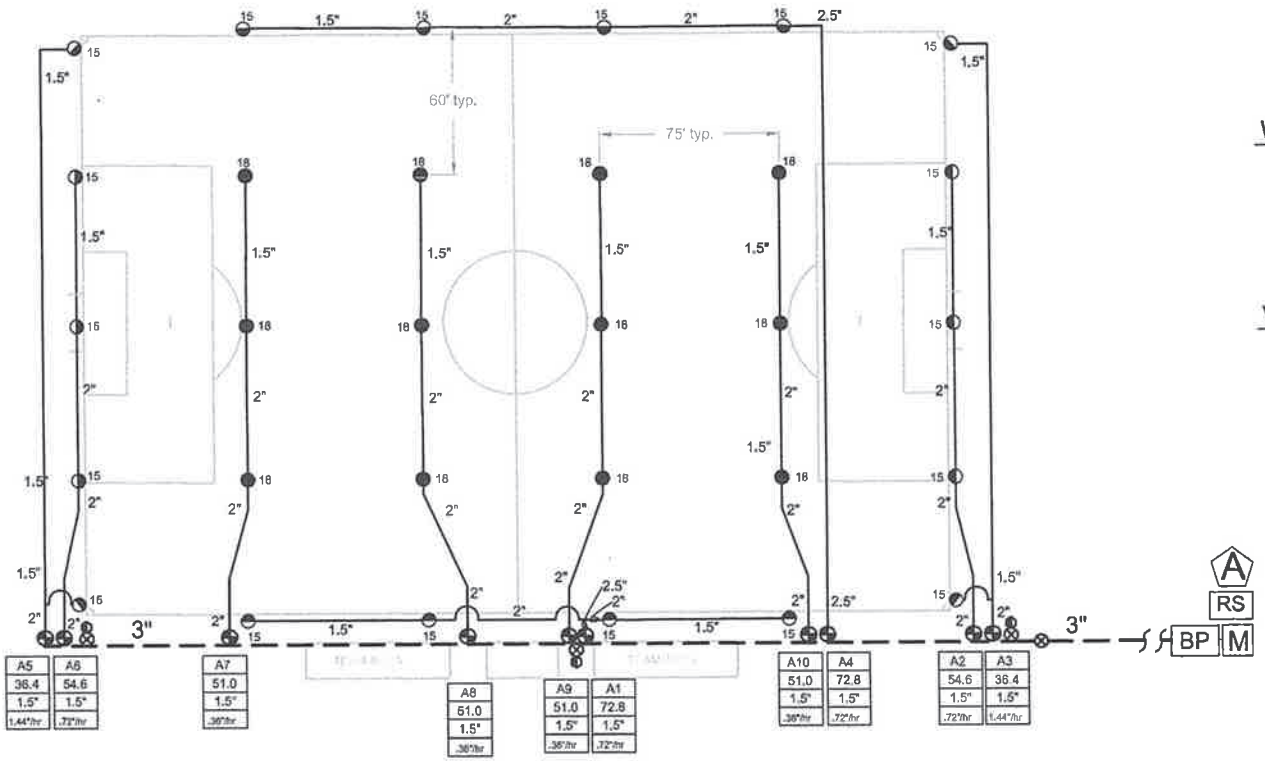

WATER REQUIREMENT

-AT FIELD ELEVATION
-WITHIN 100' OF FIELD
-DOWNSTREAM OF BACKFLOW IS
73.0 GPM @ 90 PSI

VALVE ID GUIDE

A1	STATION NUMBER
55	GPM
1.5"	VALVE SIZE
.50"/hr	PRECIPITATION RATE

IRRIGATION LEGEND

PRODUCT DESCRIPTION
- HUNTER I-40-04-SS-ON-XX/I-40-06-SS-ON-XX, NOZZLE AS SHOWN
- HUNTER I-40-04-SS-XX/I-40-06-SS-XX, NOZZLE AS SHOWN
  NOZZLE PERFORMANCE:
  #15 @ 80 PSI - 18.2 GPM 59' RADIUS
  #18 @ 80 PSI - 17.8 GPM 62' RADIUS
- HUNTER ICV/IBV ELECTRIC CONTROL VALVE SIZE AS SHOWN
- HUNTER HQ-44-XX-AW QUICK COUPLER VALVE (OPTIONAL)
- HUNTER IC-1200 SOLID STATE METAL CABINET CONTROLLER
- RS HUNTER SOLAR-SYNC-SEN ON SITE WEATHER SENSOR
- M WATER METER MINIMUM SIZE @ 73.0 GPM IS 2.0"
- BP BACKFLOW PREVENTER SIZED TO SYSTEM GPM
- MAINLINE PIPE
- LATERAL PIPE
- SLEEVING
- ISOLATION VALVE LINE SIZED

IRRIGATION NOTES

1. SPRINKLER LOCATIONS ARE TO SCALE
2. PIPE LOCATIONS ARE DIAGRAMMATIC
3. ALL SPRINKLERS TO BE INSTALLED ON 1" SCH 80 SWING JOINTS
4. ALL COMPONENTS TO BE INSTALLED AS PER MANUFACTURERS RECOMMENDATIONS
5. MAINLINE DEPTH TO BE NO LESS THAN 18"
6. LATERAL DEPTH TO BE NO LESS THAN 16"
7. ELECTRIC CONTROL VALVES TO BE COVERED WITH 12" VALVE BOX
8. LOCATE VALVES/QCV'S OUT OF HIGH TRAFFIC AREAS
9. WIRE SPLICE CONNECTIONS TO BE WATERPROOF
10. QCV TO BE LOCATED IN 10" VALVE BOX
11. ALL SLEEVES TO BE 2X PIPE RUN THROUGH THEM
12. INSTALL ALL COMPONENTS AS PER LOCAL, STATE, FEDERAL CODES
13. REFER TO HUNTER INSTALLATION DETAILS
14. REFER TO HUNTER CATALOG FOR PERFORMANCE SPECIFICATIONS
15. ADD HUNTER "FS" FOR DIRTY WATER VALVE
16. ADD HUNTER "AS" FOR PRESSURE REGULATED VALVE

SYSTEM PERFORMANCE DATA

ZONE	SIZE	FLOW	PR	DU	SC (Flo-Watch)
A1	1.5"	72.8	.72"	.88	1.1
A2	1.5"	54.6	.72"	.88	1.1
A3	1.5"	36.4	1.44"	.88	1.1
A4	1.5"	72.8	.72"	.88	1.1
A5	1.5"	36.4	1.44"	.88	1.1
A6	1.5"	54.6	.72"	.88	1.1
A7	1.5"	51.0	.36"	.83	1.2
A8	1.5"	51.0	.36"	.83	1.2
A9	1.5"	51.0	.36"	.83	1.2
A10	1.5"	51.0	.36"	.83	1.2

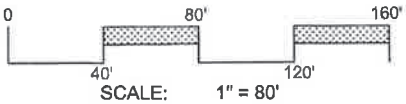

SCALE: 1" = 80'

Hunter Industries offers this plan as a general guide for estimating purposes and offers no indemnity, expressed or implied, for projects installed from this plan. Because of the many variables of every system and of every site we recommend that a qualified irrigation designer be consulted.

Hunter

OFFICIAL SOCCER FIELD 360 x 240

I-40 FIVE ROW DESIGN

Hunter Industries
1940 Diamond Street
San Marcos, California 92078
SpecPro Technical Assistance
1-800-319-4796
www.HunterIndustries.com

SHEET
1 OF 1

Discussion Item W

Dog Park Electrical

Discussion Item X

CROA and CCDD parcel swap

Discussion Item Y

Recreation Program Definitions

Definitions of Community Groups					
Group:	**Definition:**	**Priority:**	**Requirements:**	**Usage Fee:**	
Celebration Govemnent & Community Associations	A governing entity responsible for managing a particular part of Celebration. This entity oversees various aspects of the community, including its governance, infrastructure, services, and social and recreational activities. Association programming refers to community programs that are organized, operated, or sponsored by the association. The association often create and manage programs or activities to serve the interests and needs of the community they represent. These programs can encompass a wide range of activities, including educational workshops, social events, charitable initiatives, advocacy efforts, and more, depending on the goal and focus of the association at that time.	1	Celebration Government & Community Associations representative	**No usage or equipment fees**	
Partner Program	A program organized or supported by an association or business, vetted for credibility, and run in partnership with Town Hall. Each organization has a requirement for members or participants to pay a registration fee and/or other fees determined by the individual organization. This type of program is commonly found in various community and organizational settings and can serve different purposes, such as promoting local initiatives or providing recreational activities in the arts / sports.	2	Good financial standings, business with a LLC (or a 501c3 for non-profit), certificate of insurance, consistent schedule, completed a level 2 background check, register of coaches and participants (resident vs. non-residents), resident discount, safety & equipment plan, parent & instructor orientation, code of conduct. ***Minimum annual usage fee of $2,500 in order to continue as a partner program.***	**For profit and Non-Profit: monthly flat rate based off 20% of their annual financial statements or 990 statement.**	**Annual financial statements and/or 990 statements will be submitted in May and presented to the Finance Committee in August.**
Civic and Service Groups	Voluntary organizations that operate on a nonprofit basis and regularly gather to engage in charitable activities and community service within the Celebration community or a similar locality. These groups often focus on donating their time, fundraising for various causes, and sponsoring events that benefit the community and surrounding areas. Key Points in this Definition are: Voluntary: Civic and service groups are composed of individuals who willingly join and contribute their time and efforts without monetary compensation. **Non Profit:** These groups are organized with the primary goal of benefiting the community rather than generating profits for their members. They typically have nonprofit status, which means they are tax-exempt and their resources are dedicated to their charitable missions. **Charitable Works:** Civic and service groups engage in various charitable activities, which can include volunteering at local events, supporting causes such as education, healthcare, or social services, and raising funds for community projects. **Proof of Non-Profit Status:** This requirement ensures transparency and accountability, as it may be necessary for these groups to demonstrate their nonprofit status to receive certain benefits or engage in specific charitable activities.	3	Good financial standings, 501c3 document submitted, certificate of insurance, register of coaches and participants (resident vs. non-residents), resident discount, safety & equipment plan, code of conduct. **(Limited number of groups allowed per year)**	**Annual financial statement will be submitted yearly. Once a month for two hours will be provided at no charge. Any additional facility usage will be charged the facility rate. Set-up/breakdown time is included with reservation time.**	
Club	A social organization or group of individuals who come together for a common purpose or shared interest, and which often provides comfort, support, encouragement, and advice. Clubs play a significant role in connecting people with similar passions or goals and fostering a sense of community. Whether it's a sports club, hobbyist group, professional association, or support group, these organizations often have specific rules and structures to help facilitate their activities and missions. Members of clubs often benefit from the camaraderie and opportunities for learning and growth that come from participating in such organized gatherings. Each organization may choose to collect dues or fees from their members to support specific activities, trips, or the general functioning of the organization.	4	Good financial standings, 501c3 document submitted, certificate of insurance, register of coaches and participants (resident vs. non-residents), resident discount, safety & equipment plan, code of conduct.	**Once a month for two hours will be provided at no charge for each club. Clubs that require registration fees: Additional facility usage will be charged the facility rate once the two hours per month conclude. Set-up/breakdown time is included with reservation time. Clubs that do not require registration fees: Will be able to reserve additional hours with a maximum of a 2-week notice to the Parks and Recreation Team.**	**Clubs will be in subcategorized: Recreational Club, Social Club, Support Club.**
Education Group	An organization, whether private or public, that serves as an institution of learning within a specific community. These institutions are dedicated to providing education and instruction to individuals in various stages of their academic or professional development. Education groups can include schools, colleges, universities, vocational training centers, and other educational entities that contribute to the educational needs of Celebration.	5	Good financial standings, 501c3 document submitted, certificate of insurance, register of coaches and participants, safety & equipment plan, code of conduct.	**Facility rental, staff time and equipment fees.**	
Celebration Resident Rental	A person or family member who resides within the Celebration community and is a member in good standing of the Celebration Residential Owners Association or rents a home from a member in good standing of the Celebration Residential Owners Association	6	Certificate of insurance for event, vendor's certificate of insurance, completed diagram	**Facility rental, staff time and equipment fees.**	
Non-Resident Rental	A non CROA association member program or event that wants to rent a facility.	7	Certificate of insurance for event, vendor's certificate of insurance, completed diagram	**Facility rental, staff time and equipment fees.**	

Recreation Programs

Programming:	Designation:
Lifelong	Civic and Service Group
Thriving in Place	Civic and Service Group
Ladies Open Play - Tennis	Club
Men's Open Play - Tennis	Club
Ma Jonng	Club
Table Tennis	Club
Celebration Community Chorus	Club
X-Factor Dance and Gymnastics	Partner Program
Little Tunes	Club
Irish Dance	Partner Program
Ballroom Dance	Club
Celebration Zumba	Club
Family Fitness	Partner Program
Aqua Yoga	Partner Program
Celebration Cyclones	Partner Program
Celebration Yoga	Partner Program
Cele Ballers	Club
Celebration Little Fins	Partner Program
Advantage Tennis	Partner Program
Celebration Beach Tennis	Club
Celebration Dog Training	Club

Celebration Farmer's Market	Partner Program
Boy Scouts	Club
Celebration Foundation	Civic and Service Group
Celebrators	Club
Daughters of American Revolution	Club
Garden Club	Club
Knights of Columbus Bingo	Civic and Service Group
Veterans	Club
Celebration Embrace	Civic and Service Group
Celebration Soccer Club	Partner Program
Celebration Little League	Partner Program
Celebration Flag Football	Partner Program
AAU Flag Football	Club
Phoenix Lacrosse	Club
Celebration Volleyball	Club
Casty Sports	Partner Program
Montessori School	Education Group
Celebration AA	Club
Recovery at Celebration	Club
Overeaters Anonymous	Club
12 Steps to Recovery	Club
RELIC	Club
Democrats	Club

United We Stand	Club